REPUBLIC OF TURKEY
YILDIZ TECHNICAL UNIVERSITY
GRADUATE SCHOOL OF NATURAL AND APPLIED SCIENCES

INTERNET OF THINGS BASED BATTERY MANAGEMENT SYSTEMS APPLICATIONS

ERHAN YILMAZ

M.Sc. THESIS
DEPARTMENT OF ELECTRONICS AND COMMUNICATIONS ENGINEERING
PROGRAM OF ELECTRONICS

ADVISER
ASST. PROF. DR. NİHAN KAHRAMAN

İSTANBUL, 2017

REPUBLIC OF TURKEY

YILDIZ TECHNICAL UNIVERSITY

GRADUATE SCHOOL OF NATURAL AND APPLIED SCIENCES

INTERNET OF THINGS BASED BATTERY MANAGEMENT SYSTEMS APPLICATIONS

A thesis submitted by Erhan YILMAZ in partial fulfillment of the requirements for the degree of **MASTER OF SCIENCE** is approved by the committee on 01/06/2017 in Department of Electronics and Communications Engineering, Electronics Program.

Thesis Adviser

Asst. Prof. Dr. Nihan KAHRAMAN

Yıldız Technical University

Approved By the Examining Committee

Asst. Prof. Dr. Nihan KAHRAMAN

Yıldız Technical University

Prof. Dr. Tülay YILDIRIM, Member

Yıldız Technical University

Prof. Dr. İsmail Serdar ÖZOĞUZ, Member

İstanbul Technical University

This study was supported in Electrical Measurement and Automotive Electronics Laboratory at Berlin Beuth university of Applied Sciences.

ACKNOWLEDGEMENTS

This thesis study is conducted in Electrical Measurement and Automotive Electronics Laboratory at Berlin Beuth University of Applied Sciences with in Erasmus+ program terms of agreement.

The preparation of this study has improved my academic and technical background and has changed my vision by positive. It also helped me to gain perspective and knowledge on fields such a Battery Managements Systems, Internet of Things and German study disciplinary.

Even though I have full possession on this study line by line by, word by word, I must tell about the key people whom helped and supported me whenever I need. I would not be able do these without them.

At the beginning, I am very thankful to my great family especially my dear, powerful, supportive and tough mother and father. My great and clever brothers and deeply thank you all my relatives.

I would like to send my deep love to my co-adviser Prof. Dr.-Ing. Detlef Heinemann and his laboratory engineer Frank Stenzel since they were such a nice people and we had great memories together during my thesis study period in Berlin. Also, I would like to send my deep love to my adviser Asst. Prof. Dr. Nihan Kahraman since she was so kind and helpful teacher in my whole study in Yıldız Technical University. And for sure I would like to say thank you to my colleague and dear friend Arda Güney for his helpfulness and advices these were helpful for me.

Lastly I would like to say thank you to all Berlin Beuth University of Applied Sciences people and crew. It was such a nice part of my life and great experience for me to be in Beuth University and Berlin.

February, 2017

Erhan YILMAZ

TABLE OF CONTENTS

Page

LIST OF ABBREVIATIONS ix

LIST OF FIGURES x

LIST OF TABLES xii

ABSTRACT xiii

ÖZET xv

CHAPTER 1

INTRODUCTION 1

1.1 Literature Review 1

1.2 Objective of the Thesis 2

1.3 Hypothesis 2

CHAPTER 2

INTERNET OF THINGS 3

2.1 Overview of the Internet of Things 5

2.1.1 Wi-Fi 5

2.1.2 Ethernet 5

2.1.3 IPv6 6

2.1.4 RFID 7

2.1.5 NFC 7

2.1.6 Bluetooth 8

2.1.7 6LowPAN 8

2.1.8 ZigBee 9

2.2 Real World Applications of the Internet of Things 9
2.2.1 Smart Home Applications 11
2.2.2 Wearables Applications 11
2.2.3 Smart City Applications 12
2.2.4 Smart Grid Applications 12
2.2.5 Industrial Applications 12
2.2.6 Connected Car Applications 13
2.2.7 Connected Health Applications 13
2.2.8 Smart Retail Applications 15
2.2.9 Smart Supply Chain Applications 15
2.2.10 Smart Farming Applications 16
2.3 Machine to Machine Communication 17
2.3.1 Machine to Machine Applications 18
2.4 Future of The Interne of Things 19
2.4.1 Platforms 19
2.4.2 Microprocessors and Architectures 19
2.4.3 Operating Systems 20
2.4.4 Standards and Ecosystems 20
2.4.5 Security 20

CHAPTER 3

BATTERY MANAGEMENT SYSTEMS 21

3.1 What is The Battery management System? 22
3.2 Battery Management System Functions 22
3.2.1 Management 22
3.2.1.1 Protection 23
3.2.1.2 Thermal Protection 24
3.2.2 Balancing Battery Cells and Distribution the Energy 25
3.2.2.1 Passive Balancing 25
3.2.2.2 Active Battery Balancing 27
3.2.3 Measurement in Battery Management Systems 29
3.2.3.1 Voltage Measurement 30

3.2.3.2 Current Measurement 31
3.2.3.3 Temperature Measurement 33
3.3 Battery Management System Topologies 35
3.3.1 Centralized Battery Management Systems 35
3.3.2 Distributed Battery Management Systems 36
3.3.3 Modular Battery Management Systems 37
CHAPTER 4
DESIGN OF BATTERY MANAGEMENT SYSTEM MAIN CARD 39
4.1 Block Diagram and Features 39
4.1.1 Main Controller 40
4.1.1.1 XMC4500 Series Microcontrollers 41
4.1.2 Internet of Things Platform 43
4.1.2.1 ESP8266 44
4.1.2.2 MQTT 45
4.1.3 CAN BUS Interfaces 46
4.1.4 SD/MMC Card Storage 47
4.1.5 Bluetooth Device 48
4.1.6 Temperature Sensor Interface and Mosfet Switches 49
4.1.7 LEDs and Switches 50
4.1.8 Power Domains 50
4.2 Circuit Schematic of the Main Card 51
4.3 Printed Circuit Board Design of the Main Card 54
CHAPTER 5
RESULTS AND DISCUSSION 57
5.1 Test Setup and Installation 57
5.2 Communication with Computer 58
5.3 Communication with Smart Phone 59
5.4 Storage Measurement Values 60
5.5 Conclusion 62

REFERENCES 63

CURRICULUM VITAE 65

LIST OF ABBREVIATIONS

ARM	Acorn RISC Machine
BMS	Battery Management System
CAD	Computer Aided Design
CAN	Controller Area network
DAC	Digital Analog Converter
DSP	Digital Signal Processing
FAT	File Allocation Table
I2C	Inter Integrated Circuit
I2S	Inter IC Sound
IC	Integrated Circuit
IETF	Internet Engineering Task Force
IIC	Industrial Internet Consortium
IoT	Internet of Things
ITU	International Telecommunication Union
JTAG	Joint Test Action Group
LED	Light Emiting Diode
LIN	Local Interconnect Network
M2M	Machine to Machine
MIT	Massachusetts Institute of Technology
MMC	Multi Media Card
MOSFET	Metal Oxide Semiconductor Field Effect Transistor
MQTT	MQ Telemetry Transport
NTC	Nagative Temperature Coefficient
PC	Personal Computer
PTC	Positive Temperature Coefficient
RFID	Radio Frequency Identification
SD	Secure Digital
SoC	System on Chip
SWD	Serial Wire Debugger
UART	Universal Asynchronous Receiver Transmitter
WDT	Watch Dog Timer

LIST OF FIGURES

Page

Figure 2.1 Internet of Things Vision [10] 4
Figure 2.2 An Example ADSL Ethernet Modem 6
Figure 2.3 Example of An IPv6 Address [13] 6
Figure 2.4 RFID Reader Device 7
Figure 2.5 Bluetooth Controlled Measurement and Control Card 8
Figure 2.6 Represent of an Example 6LowPAN Network [14] 9
Figure 2.7 Internet of Things Application Areas [15] 10
Figure 2.8 Internet of Things Applications Overall Popularity [16] 11
Figure 2.9 Amazon Automated Warehouse [17] 13
Figure 2.10 Smart Rod Application Prototype for Disabled People 14
Figure 2.11 Smart Truck Application Screenshot 15
Figure 2.12 Representation of the Machine to Machine Concept [19] 17
Figure 3.1 The First Chemical Battery [20] 21
Figure 3.2 A Contactor Control Board Figure 23
Figure 3.3 An Example Figure of Battery Cells with Temperature Sensors 24
Figure 3.4 Voltage-Time Plot Two Cells During Charge [22] 26
Figure 3.5 Passive Battery balancing General Block Diagram 27
Figure 3.6 Time Switching Capacitor Technique 28
Figure 3.7 PowerPump Example Circuit – Pump Cell South(P2S) [23] 29
Figure 3.8 An Example Battery Cells Voltage Measurement 30
Figure 3.9 An Example Battery Cells Voltage and Current Measurement 31
Figure 3.10 LEM HTFS 200-P Current Transducer 32
Figure 3.11 Some of Temperature Sensors [21] 33
Figure 3.12 An Example Temperature Measurement System: (a) Hardware part of the System, (b) Computer Interface of the System 34

Figure 3.13 An Example Centralized Battery Management System [24] 35
Figure 3.14 An Example Distributed Battery Management System [25] 36
Figure 3.15 Current Measurement Module for Modular Battery Management Systems 37
Figure 3.16 Battery Balancer and Voltage Measurement Module for Modular Battery Management Systems 38
Figure 4.1 IoT Based Battery Management System Main Card Block Diagram 39
Figure 4.2 IoT Based BMS Main Controller Detailed Circuit Schematic 40
Figure 4.3 IoT Based BMS Main Controller Detailed Circuit Schematic 41
Figure 4.4 XMC4500 Series Microcontrollers Block Diagram [26] 42
Figure 4.5 IoT Platform Part Schematic of the Main Card 43
Figure 4.6 ESP8266 Based ESP-12 IoT Platform 44
Figure 4.7 MQTT Basic Block Diagram 46
Figure 4.8 CAN Bus Interface Schematic Diagram 47
Figure 4.9 SD/MMC Card Interface of the Main Card 48
Figure 4.10 Bluetooth Interface of the Main Card 48
Figure 4.11 Temperature Sensor Interface and Mosfet Switches Schematic of the Main Card 49
Figure 4.12 Push Button and LEDs Schematic Diagram of the Main Card 50
Figure 4.13 Power Domains Schematic Diagram of the Main Card 51
Figure 4.14 Electronic Circuit Schematic Sheet 1 of the Main Card 52
Figure 4.15 Electronic Circuit Schematic Sheet 2 of the Main Card 53
Figure 4.16 Printed Circuit Board Layouts of the Main Card 54
Figure 4.17 3D Rendering of the Main Card Printed Circuit Board 55
Figure 4.18 Internet of Things Based Battery Management System Main Card 55
Figure 5.1 Test Setup of the Main Card 57
Figure 5.2 IoT Based Battery Management System Block Diagram 58
Figure 5.3 Receiving Cell Voltage Values as Subscriber from the BMS Main Card by Personal Computer 59
Figure 5.4 Receiving Cell Voltage Values as Subscriber from the BMS Main Card by Smart Phone 60
Figure 5.5 An Example Data Logs of the Main Card 61
Figure 5.6 Graphic of the Logged Cell Voltage Values 61

LIST OF TABLES

Page

Table 2.1 M2M Development and Change Process [18] 18

ABSTRACT

INTERNET OF THINGS BASED BATTERY MANAGEMENT SYSTEMS APPLICATIONS

Erhan YILMAZ

Department of Electronics and Communications Engineering

M.Sc. Thesis

Adviser: Asst. Prof. Dr. Nihan KAHRAMAN

As we have witnessed, nowadays technology is growing up rapidly which means new technologies, concepts, methodologies, applications and so on are showing up themselves. In that context to influence for different disciplines each other is became inevitable sure. Interdisciplinary studies could be more useful and bring new innovations into a real life as well. Therefore, for this study we have focused onto two application areas those are battery management systems and IoT (Internet of Things).

As we know battery management systems are becoming a more important since mobile electricity devices, e-cars, e-bikes and so on. Internet of things also became a popular and trend topic in the last few years as well.

Internet of Things in short form IoT aims to give an internet flexibility to simple electronics devices, systems, consumer products and so on which would make devices more connected and bring more useful applications into a real life.

Monitoring is important part of the battery management systems. Operator, driver, or who in charge of the system should monitor the system values and know how it is going on.

For conventional battery management systems to monitor system values which means sensing values such a voltage, current and temperature values operator should connect to devices via computer or kind of device with some specific hardware or tools. Therefore, that brings more cost and restricts flexibility of the system. Therefore, to exceed these issues we have brought together those two systems and have studied on the Internet of things based battery management systems. These issues will be discussed in detail later in this study.

Key words: Battery management systems, internet of things, monitoring

ÖZET

NESNELERİN İNTERNETİ TABANLI BATARYA YÖNETİM SİSTEMLERİ UYGULAMALARI

Erhan YILMAZ

Elektronik ve Haberleşme Mühendisliği Anabilim Dalı

Yüksek Lisans Tezi

Tez Danışmanı: Yrd. Doç. Dr. Nihan KAHRAMAN

Günümüzde teknoloji hızla gelişmekte, yeni teknolojiler, konseptler, metodolojiler uygulamalar ve dahası kendini göstermekte. Bu bağlamda farklı disiplinlerin birbirleri ile etkileşimleri kaçınılmaz hale geldi şüphesiz. Disiplinler arası çalışmalar daha işlevsel, daha yenilikçi uygulamalar hayata getirebilir tabii. Bu nedenle bu tez çalışmasında batarya yönetim sistemleri ve nesnelerin interneti olan iki uygulama alanına odaklanılmıştır.

Bildiğiniz gibi elektrikli araçlar, e-arabalar, e-bisikletler ve benzeri cihazlar nedeniyle batarya yönetim sistemlerinin önemi gün geçtikte artmaktadır. Benzer şekilde nesnelerin interneti de geçtiğimiz yıllarda popülerliğini arttırmıştır.

Nesnelerin interneti (Internet of Things) kısa adıyla IoT, basit elektronik cihazlara, sistemlere, kullanıcı ürünlerine vs. internet yetkinliği kazandırmayı amaçlar. Böylece cihazlar birbiri ile daha bağlı hale gelebilir, gerçek hayata daha kullanışlı uygulamalar getirebilirler.

Bunun yanı sıra batarya yönetim sistemleri (BMS) ise elektrikli araçlarında yaygınlaşmasıyla daha da önemli hale gelmiştir. Genel olarak batarya yönetim sistemi üzerine olan çalışmalarda sistemin verimliliği üzerine odaklanılmıştır. Sistemi izlemede batarya yönetim sistemlerinin önemli bir parçasıdır şüphesiz. Operatör ya da sistemden sorumlu ilgili kişi sistemin durumunun nasıl gittiğini bilmem için sistem değişkenlerini izlemelidir.

Geleneksel batarya yönetim sistemlerinde voltaj, akım, sıcaklık gibi sistem verilerinin izlenmesi için operatörün özel donanım veya ekipmanlar kullanarak bilgisayar veya benzeri cihazlarla sisteme bağlanması gerekir. Dolayısıyla bu sisteme fazla maliyet getirir ve sistemin esnekliğini kıstılar. Bu nedenle bu durumu aşmak için bu çalışmada nesnelerin interneti ve batarya yönetim sistemlerini bir araya getirip nesnelerin interneti temelli batarya yönetim sistemleri üzerinde çalışma gerçekleştirilmiştir. Bu sayede iletişim kabiliyeti yüksek, internet uygulamalarına müsait, daha esnek batarya yönetim sistemlerinin geliştirilmesi mümkün kılınmıştır.

Anahtar kelimeler: Batarya yönetim sistemleri, nesnelerin interneti, izleme

CHAPTER 1

INTRODUCTION

1.1 Literature Review

Mostly studies for battery management systems were focused on other parts of the system for efficiency than monitoring. Monitoring for battery management systems were not have major changes for past decades. Generally monitoring of the battery management systems done by using CAN bus communication. Systems can connect other devices via CAN bus. Thus, you could connect your computer or monitoring device using such a CAN bus converter to monitoring system. CAN bus provides safety communication but also restricts the system for monitoring. Since for modular battery management systems done whole communication by CAN bus, it could be insecure to connect other devices over CAN bus for monitoring.

In the literature, there are some studies for battery management systems. One of them is done by Buccollini and his colleagues [1]. In this study communication of the battery management system done via CAN bus communication. Similarly, it is same for Aldoğan's [2] study. In Aldogan's study communication between battery management system modules have done by CAN bus communication. System also could be monitoring by using same CAN bus network with external CAN bus device. As more innovative study Lucas and his colleagues have worked on a battery management system that has network capability [3]. In this study, it is aimed to storage acquired systems values in a distance database over the internet.

In summary CAN bus is indispensable for battery management systems since its advantages such a safety, robustness, low error ratio. But it brings some extra costs and restrictions to publish systems public variables for monitoring purposes. To overcome

these disadvantages this study has scoped to combining battery management systems with internet of things applications.

1.2 Objective of the Thesis

This study aims to design a novel battery management system main card for modular battery management systems that has ability to connect to the internet. Thus, traditional battery management systems could have ability to connect to the internet that makes easier to monitoring battery managements systems as wireless or over the internet. Also, that could bring novel applications for battery management systems thanks to internet of things. Further details are given for next chapters.

1.3 Hypothesis

Most of the battery management systems use CAN bus communication for whole system parts and modules. It increases system reliability, safety and robustness. But it also makes monitoring more difficult and put some additional costs since they have wired communication. In this study by designing a novel battery management system main card, monitoring part separated from the CAN bus communication network of the system and made as wireless. Thus, it is considered that will make monitoring easier and cost effective.

CHAPTER 2

INTERNET OF THINGS

IoT is abbreviation of the Internet of Things that has defined as ability of everyday objects to connect to the internet and to send and receive data [4]. In 1991, in the Cambridge University the system that has prepared by fifteen academicians to see coffee machine by the camera was accepted as first step of the internet of things [5]. In 1999, by MIT Auto-ID laboratory Internet of Things concept was proposed. Then, preparing first report about the internet of things by International Telecommunication Union (ITU) and proposal of the smart planet concept by CEO of the IBM made Internet of Things more popular [6].

In that context, nowadays many devices have an internet ability. For example, white goods, coffee machines, scales and so on. For example, when you leave, your office think about that you have connected to your coffee machine to prepare coffee. When you arrive home your coffee is ready. Similarly, your fridge that has internet ability could order foods when they are finished or make you inform about that. Than you don't get any surprise for foods in the fridge. We can make more examples about IoT applications.

There are many technologies behind the internet of things to connect things each other. These things can act as communication nodes via the internet by using other data communication sources such as Radio Frequency Identification (RFID). Internet of Things also includes smart devices those can perform specific tasks without human interaction, also includes machine to machine talking. Thus, internet of things could be considered not only as a hardware and/or software model. It also could be considered to contain social characteristics and zero human interaction [7].

It considered that internet of things concept based on machine to machine (M2M) communication. In M2M technology, machines could communicate between each other

without human interaction [8]. Internet of things concept is more comprehensive than M2M concept. While M2M concept does not requires human interaction, in the internet of things concept human interaction could be included depending on the application.

Various companies make investments in the internet of things area. By leading and cooperating between companies such AT&T, Cisco, GE, IBM and Intel, Industrial Internet Consortium (IIC) was established. In 2013 AllSenn Alliance was established. Regardless brand, operating system and infrastructure, AllSenn alliance have studies on to connect smart devices and run together. Cisco, IBM, Intel and many establishments have products in context of the internet of things [9].



Figure 2.1 Internet of Things Vision [10]

2.1 Overview of the Internet of Things

When we talk about internet of things, doubtless we need to consider about the concepts those are having shaped infrastructure of the internet of things. Such Wi-Fi, Ethernet, IPv6, RFID, NFC, Bluetooth, 6LowPAN, ZigBee kind technologies, concepts or methodologies are base of the internet ecosystems. These are also consisting of infrastructure of the internet of things of course.

2.1.1 Wi-Fi

Wi-Fi, it is an abbreviation of "Wireless Fidelity" and the technology that connects devices such personal computers, digital music players, game consoles, smart phones smart televisions to the internet as wireless [11]. It is most used technology to connect the internet. Using of the Wi-Fi increases over the world day by day. Since it is easy to use Wi-Fi it is possible to see many Wi-Fi networks at places such an airport, cafes, restaurants and so on. Also, many devices those can connect to the internet have Wi-Fi hardware to connect to the internet as wireless.

Doubtless, since it has lot of advantages most of the internet of things applications use Wi-Fi to connect to the internet. For example, new model electronics scales use Wi-Fi to connect to the internet since they need movement flexibility in a daily life.

2.1.2 Ethernet

Ethernet is a family of computer networking technologies mostly used in local area networks, metropolitan area and wide area networks [12]. Ethernet is also name of the technology that connects devices such as personal computers, cameras, game consoles to the internet similarly to the Wi-Fi. Ethernet has advantages (Speed, reliability) and disadvantages (Wired, cost, e.g.) comparing to Wi-Fi. According to Ethernet technologies advantages its using in many applications e.g. Servers, IP cameras.

When you do not need wireless communication, it is possible to use Ethernet to connect to the internet for your internet of things applications. For example, in home automation and smart home applications Ethernet connection could use since they do not need movement flexibility more.

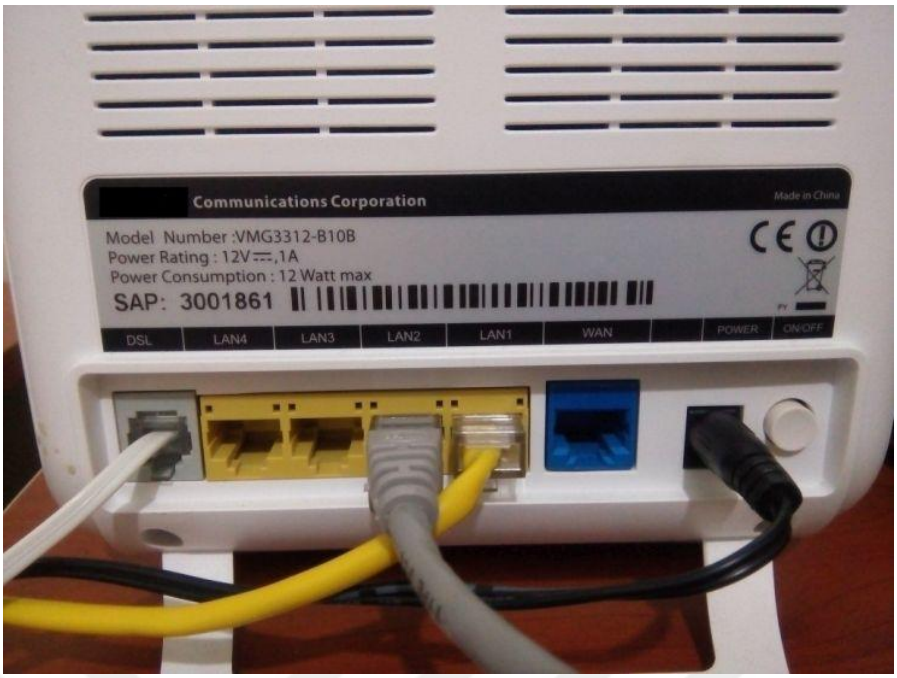


Figure 2.2 An Example ADSL Ethernet Modem

2.1.3 IPv6

IPv6, it is an abbreviation of "Internet Protocol Version 6" that is an extended version of IPv4. Since IPv4 does not meet requirements for future applications of the internet, IPv6 has developed by the IETF (Internet Engineering Task Force) [13].

Especially by increasing of the internet of things applications, using of IPv6 has become an inevitable. Experts estimate that 50 billion devices will be connected to the internet by 2020 thanks to internet of things as well. It is clear to see that IPv4 will play key role for future of the internet of things.

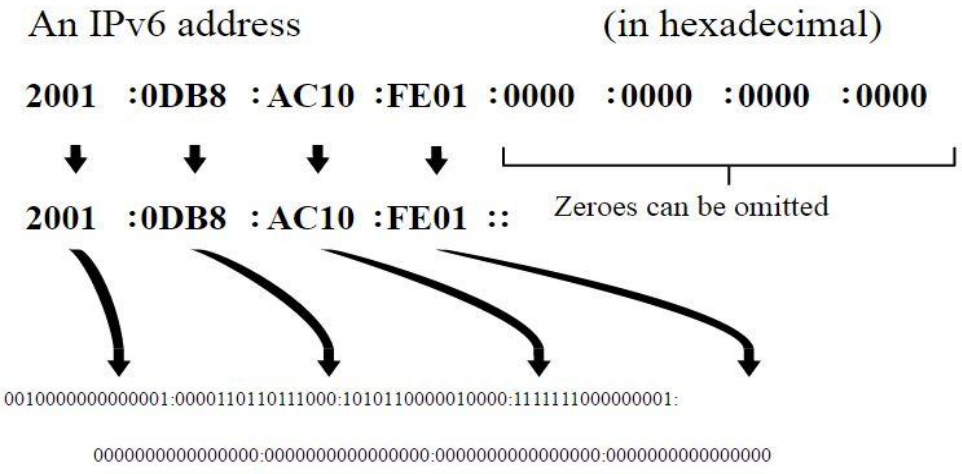


Figure 2.3 Example of An IPv6 Address [13]

2.1.4 RFID

RFID (Radio Frequency Identification) is a short distance communication technology that uses electromagnetic fields. In the RFID technology devices mostly communicate peer to peer and one of them could be passive (e.g. RFID tags, cards) that mean does not requires power supply that can get energy by electromagnetic fields those send from the active device.

There are many application areas of the RFID communication. For example, door lock systems. RFID tags or cards could be used instead of keys. By changing door lock mechanism with RFID reader, you could open doors with the RFID communication. You could also give internet ability to RFID readers to set up network between readers which is also represents internet of things application.

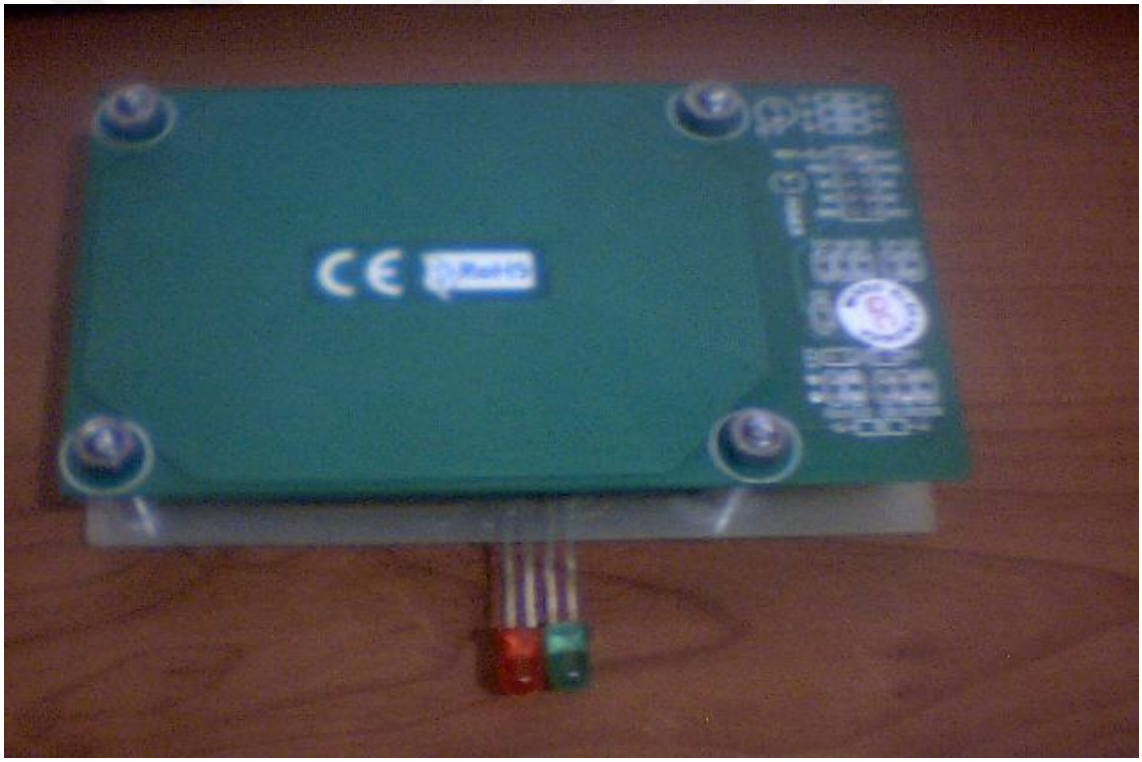


Figure 2.4 RFID Reader Device

2.1.5 NFC

NFC (Near Field Communication) is a near field communication technology that allows two devices to communication between in a short distance. NFC is a similar technology with RFID but it has high data transfer speed and can transfer big data files in a short time. Recently many smart phones support NFC communication those could transfer big data files such a video, music's, pictures.

2.1.6 Bluetooth

Bluetooth is a wireless communication technology for long distances comparing to RFID and NFC. Bluetooth allows devices such computers, smart phones to communicate between their peripheral units as wireless.

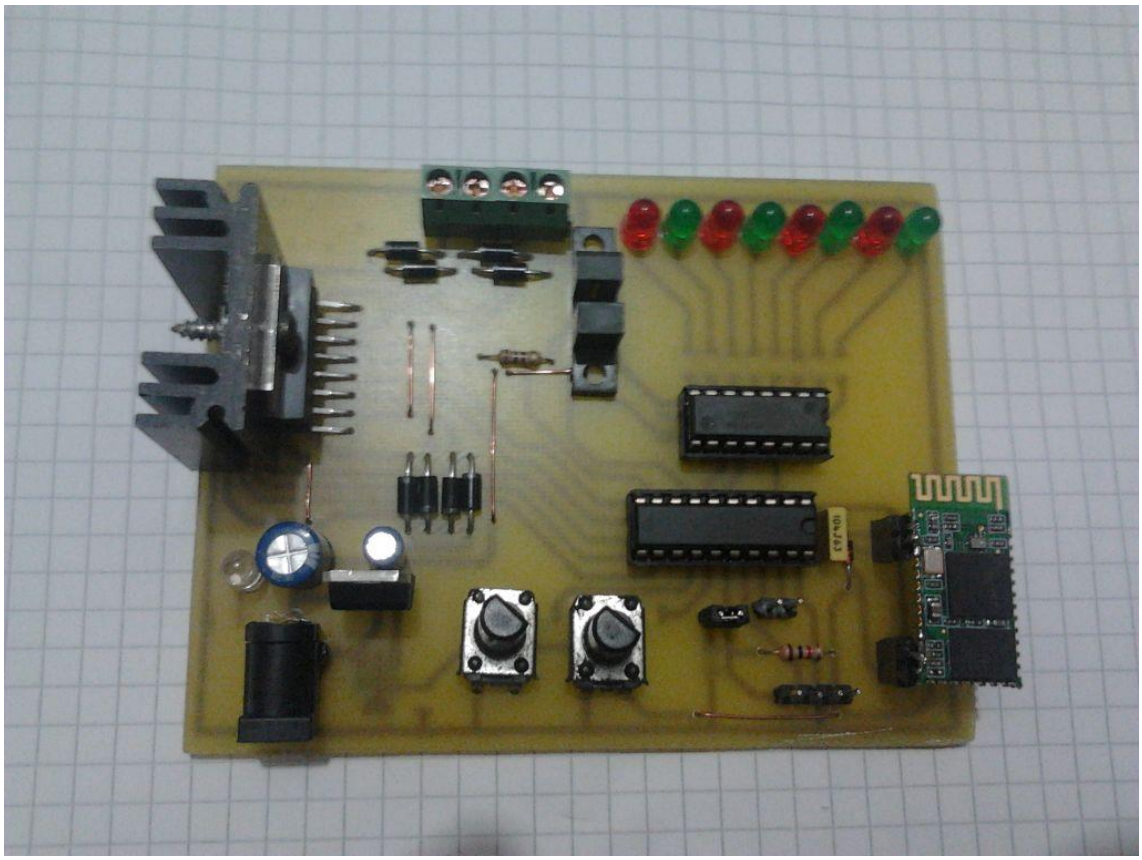


Figure 2.5 Bluetooth Controlled Measurement and Control Card

In figure 2.5 you could see the general purposes measurement and control card that has Bluetooth ability as well. This is an example application. You can connect your smart phone or personal computer to the measurement and control card and you can get measurement values such a temperature and an analog voltage values those are measured by the potentiometers. Also, you can control to the motor drivers and outputs of the measurement and control card those could be control your electronic devices in your home or office such lights, curtains, coffee machines, home appliances and so on.

2.1.7 6LowPAN

6LowPAN is an abbreviation for low power personal area networks over IPv6. 6LowPAN allows to devices to establish network over IPv6. 6LowPAN become an important when low power consumption needed for example battery powered devices.

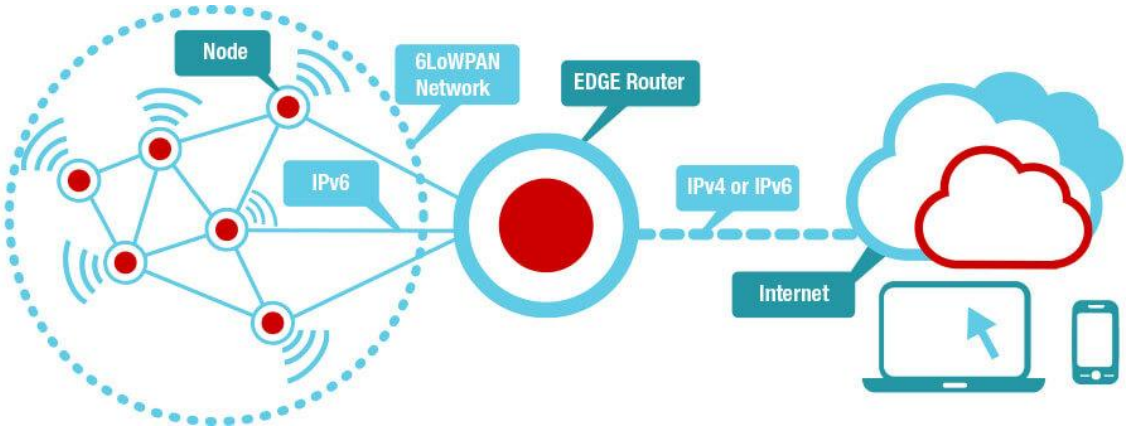


Figure 2.6 Represent of an Example 6LowPAN Network [14]

In figure 2.6 you could see a represent of an example 6LowPAN network. Here lower power 6LowPAN nodes can establish network over IPv6 then they can connect to the internet over the router or gateway devices. For example, wireless fire detectors should consume low power as much as possible. They could establish 6LowPAN network over IPv6 and in emergency cases they can make inform authorized people or activate required systems over the internet. There are many possibilities to realize internet of things applications by using 6LowPAN technology.

2.1.8 ZigBee

ZigBee is a wireless communication protocol similarly to 6LowPAN that allows to establish mesh network for low power personal are network applications. It is based on IEEE 802.15.4 standard. ZigBee is more focused for power consumption than 6LowPAN. ZigBee nodes can enter sleep mode and wake up periodically to communicate that extend battery life for battery powered applications. Unlike 6LowPAN ZigBee cannot communicate with other protocols easily. There is not a big difference between ZigBee and 6LowPAN. Cost might be the criteria for decision these technologies for your applications.

2.2 Real World Applications of the Internet of Things

As we have seen in the previous section internet of things is not an only concept, it is an ecosystem also with the other technologies those we have mentioned in the previous section. These kinds of applications were already existing before but with the name of the internet of things they have become a more structural and well organized. Meanwhile, with the internet of things trend, big brand companies and producers have

got realized importance and future of the internet of things applications. Therefore, it has become a possible to see low cost and more featured solutions for the internet of things applications.

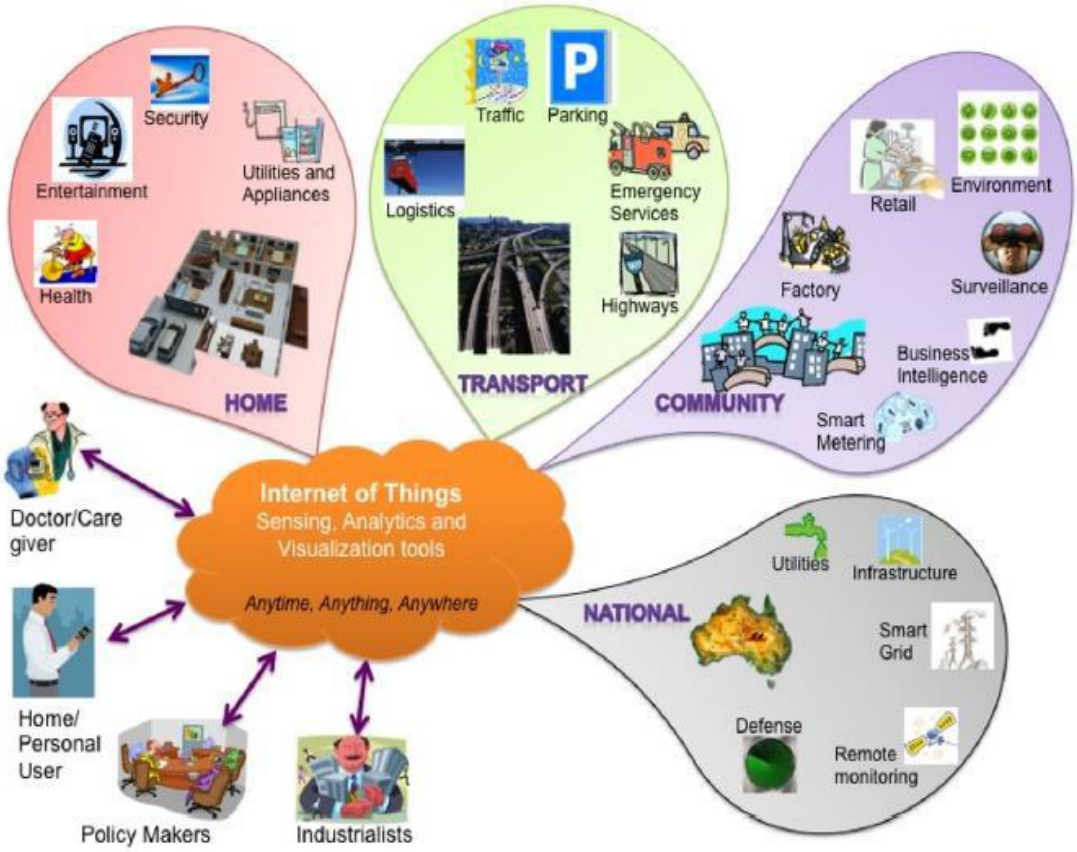


Figure 2.7 Internet of Things Application Areas [15]

In figure 2.7 some of application areas have shown for the internet of things such an industry, medical, consumer, transport, smart cities. These applications areas can be increased of course. According applications outlines you could call your applications as an internet of things applications. There is no strict definitions for the internet of things applications. Some of internet of things applications detailed for next chapters.

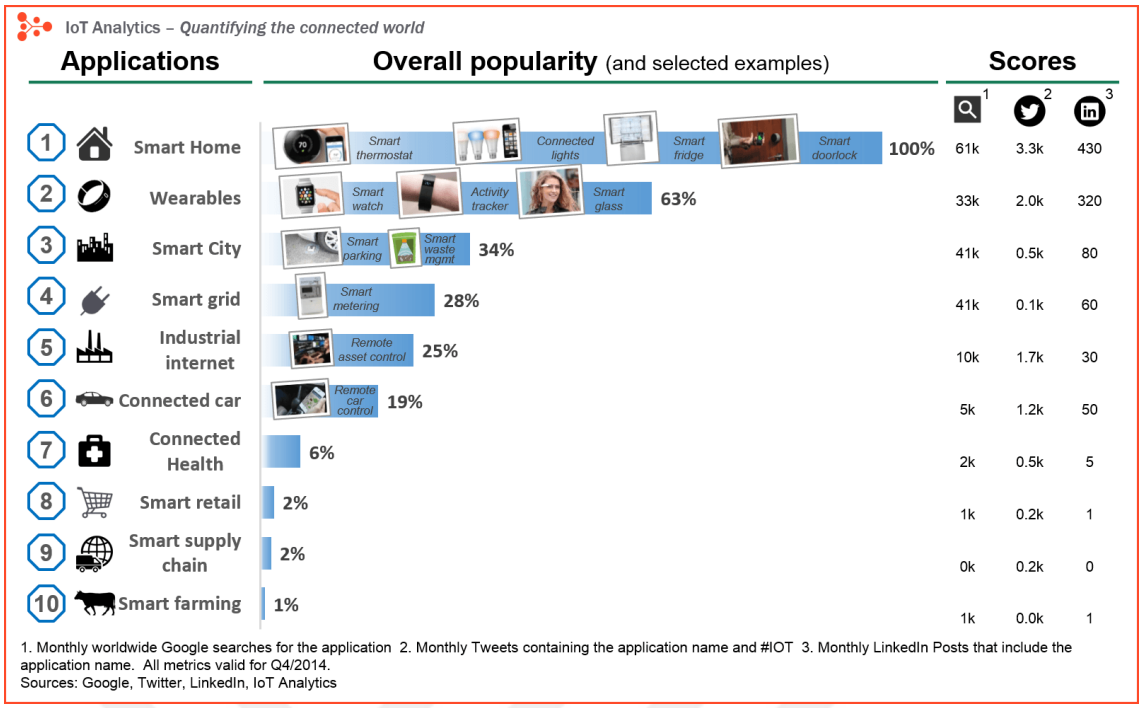


Figure 2.8 Internet of Things Applications Overall Popularity [16]

Figure 2.8 shows overall popularity of the internet of things. As you can see it is possible to internet of things application in many areas. Recently smart home, wearables and smart city applications major for the internet of things. It is expected to get more areas and applications for the internet of things in the near future.

2.2.1 Smart Home Applications

Mostly smart home applications control systems in a house such systems, lighting, heating, cooling, communications so on. Also, internet of things allows to control security systems for houses. Nowadays there are many houses those have smart home systems, internet of things applications as well. Especially new houses are building with smart home systems.

2.2.2 Wearables Applications

Wearables is one of interesting application areas in the internet of things. Usual accessories such watches, necklaces, wristbands have become smart thanks to internet of things. For example, smart watches can connect and interact with your smart phones, thus it is possible to manage your phone activities by smart watches. Also, you can track your body activities such a blood pressure, heart beat by using your watch and send these data to your phone for analyze and evaluate. Similarly, smart necklaces,

wristbands can track your activities and can communicate with emergency services over your phone in case you are in trouble.

2.2.3 Smart City Applications

It is possible to see many internet of things based applications in cities. Most popular one of them is weather forecast systems. In application, they are located specific spots in the city and they can collect weather information and send these values over the internet. People can access these values over the internet and could have information about weather. Similarly, smart parking systems make parking easier for cities. Internet of things applications make cities more smart and livable.

2.2.4 Smart Grid Applications

It is also possible to see internet of things applications for electrical grid applications. Most popular one of them is an e-metering system. They can establish wireless communications. For example, recently digital electric meters have become a popular. Those have wireless communication and new abilities to control electric consumption and analyze user statistics.

2.2.5 Industrial Applications

It is possible to see many internet of things applications in the industry since it is a huge application area. Wireless sensor systems are important for industrial applications. Since they can communicate wireless it decreases costs and make systems safety as well. In figure 2.9 you could see Amazon's autonomous warehouse. It is a good example to see how internet of things good for industrial applications. These robots can manage whose warehouse without human interaction. It also shows how autonomous systems play role for future applications.



Figure 2.9 Amazon Automated Warehouse [17]

2.2.6 Connected Car Applications

Connected cars are one of the well fitted application area for the internet of things. They are equipped with internet connection that is usually wireless internet connection such a Wi-Fi. Internet accessibility brings many possible applications for connected cars. They could get information over the internet for autonomous driving.

Connected cars also can communicate with each other that could avoid any accidents or problems. Those are aim to safety for cars.

2.2.7 Connected Health Applications

Healthcare applications have importance since it works for humans and creature's health and life quality. Internet of things also aims to help healthcare with new applications.

There are many healthcare applications such healthcare assistants, activity trackers, reminders, disabled assistants. For example, wireless Doppler devices those could connect as wireless with other devices to send patient statistics data. It allows to take care patient's health status. Also, activity trackers are can track people's health status during theirs sport activities.

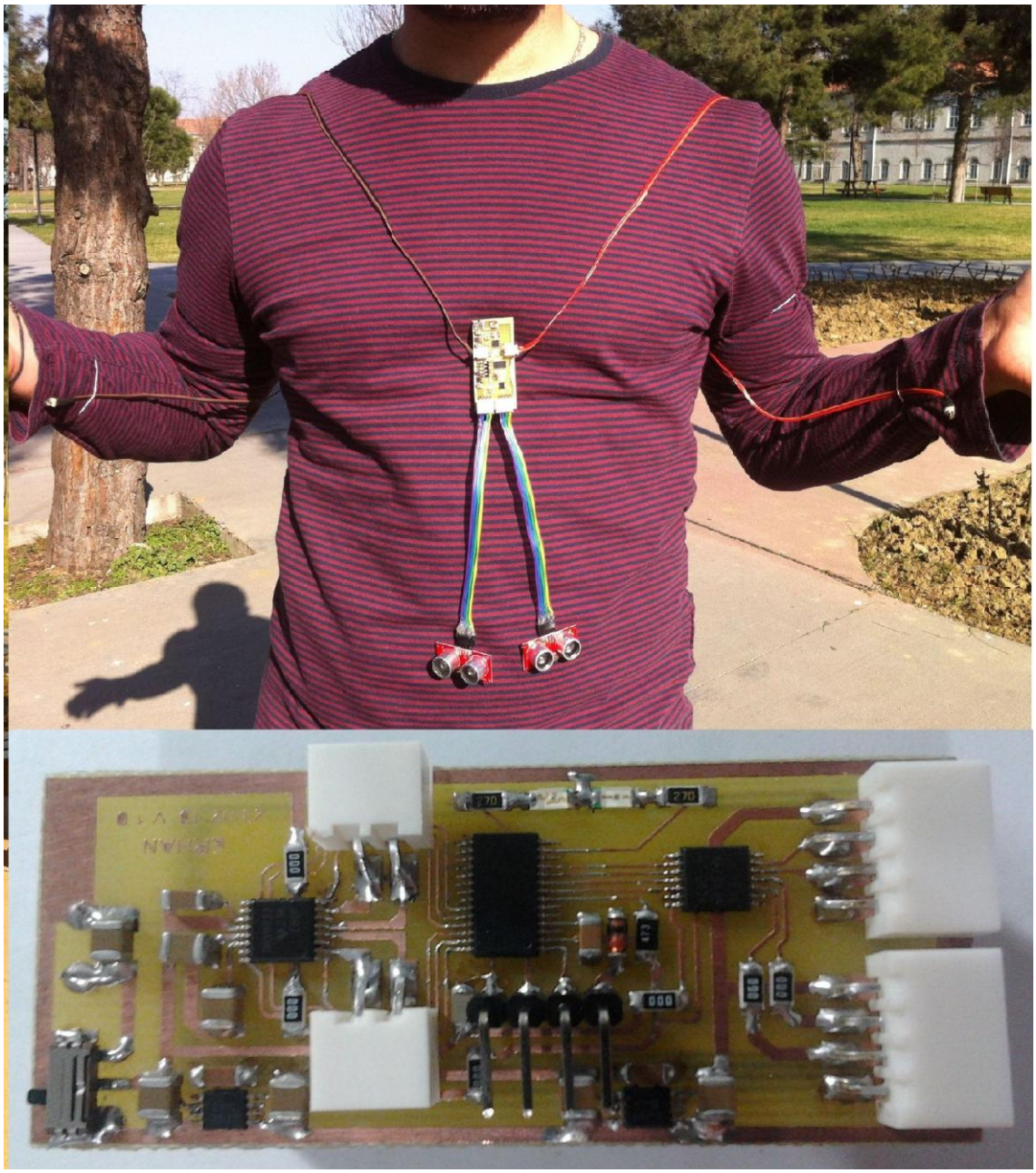


Figure 2.10 Smart Rod Application Prototype for Disabled People

In figure 2.10 prototype study for disabled people is shown. It is called as Smart Rod. Smart Rod can help blind disabled people to find out their ways in their daily life. Smart Rod also able to connect to smart phones over Bluetooth. Thus, Smart Rod could send data over Bluetooth to phone and phone can inform blind people by sound to guide them. By using smart phones features it is possible to develop more functional and further applications.

2.2.8 Smart Retail Applications

It is possible to see helpful internet of things applications in retail marketing area. One of them is a RFID tags for retail products. It provides easier traceability, transport and shipment. Also for especially for clothes RFID tags could contains washing information to wash them correctly without any damage. It helps us to make life easier.

Smart shelfs as well, they can check amount of the products on the shelfs. In case low stock on the shelfs, it can communicate with the supplier or authorized system to make them inform and supply products.

2.2.9 Smart Supply Chain Applications

One of the main issues for supply chains is traceability. Internet of things applications also aim to help for solving supply chains problems. RFID tags and QR codes help for traceability of high volume transportations.

Product status is also important during the transportation. By internet of things devices, it is possible to get information about transportation.

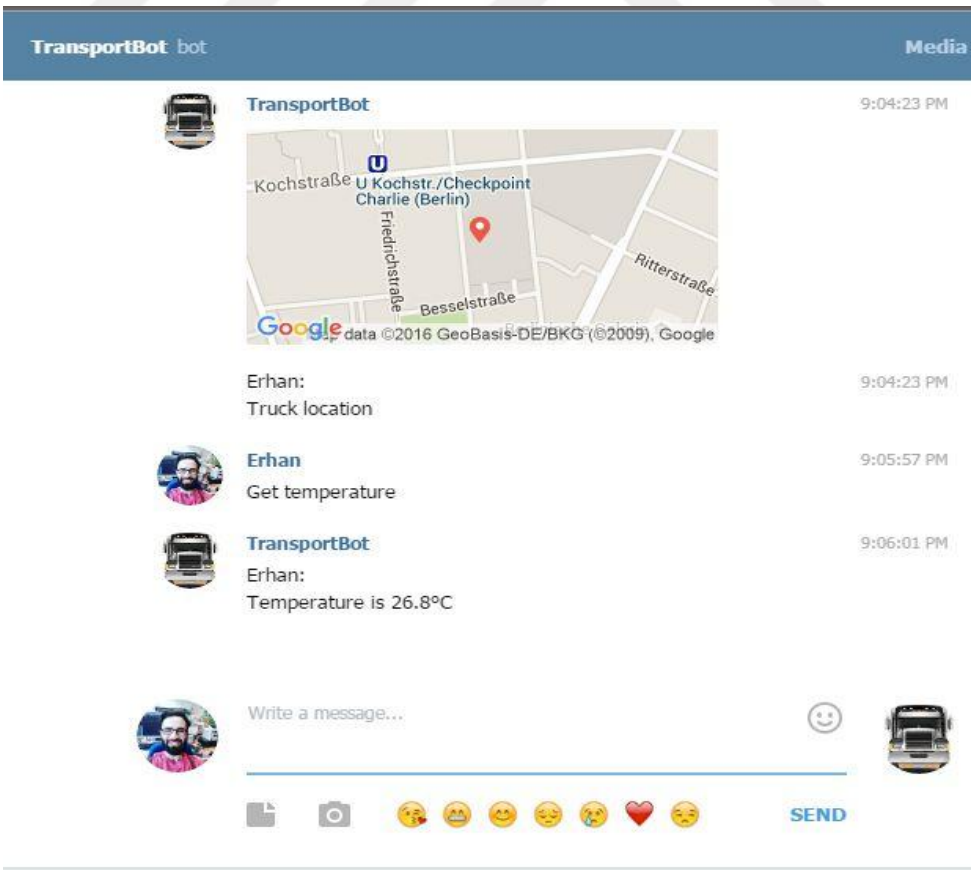


Figure 2.11 Smart Truck Application Screenshot

In figure 2.11 you can see the screenshot for smart truck application. It is an internet of things device prototype for transportation applications. The device has placed into a truck. Thus, device can get information such a temperature, location, plate number and screenshot from the road. You can get in touch with the device by using phone or computer. Device able to send data over the internet as wireless. Smart truck application makes transportation and traceability easier.

2.2.10 Smart Farming Applications

Smart farming is a huge application are from agriculture applications to animals farming applications. It is also possible to see many internet of things applications for framing and agriculture.

Farm animals tracking could be easier by RFID tags. RFID tags could be inserted for each animal in farms. These tags contain ID and some other information's about animals such a birth date, gender and so on. It makes traceability easier especially for huge animal herds.

Similarly, automatic feeder systems for animals, these control feeders in the farm to give certain amount of food for animals at the time as well. Smart feeders also can communicate with authorized person or system as wireless as well. It can make informed who is in charge in case less food in the feeders or finished. It provides robust control and management for feeding systems.

Agriculture lands are one of the most important part for farming. Mostly lands are located far from living spaces. Therefore, to make them controlled by remote would make farming easier. As an internet of things application it is possible to consider about remote controlled land applications. By remote control lands can watering automatically. Also watering profiles could be changed automatically by remote when it needed. IP cameras those are located around lands allow to watch lands from distance over the internet. Thus, farmers can monitor lands status, growing periods of the products, watering levels, climate situations and so on.

As we have seen in the previous sections it is possible to see internet of things applications in many areas. Internet of things applications make systems easier and low cost. Doubtless these applications would be increase for next years by making people aware of the internet of things.

2.3 Machine to Machine Communication

Machine to Machine communication (M2M) is creates skeleton of the internet of things. M2M concept is general name for the systems those provide two devices to communicate between each other by certain communication protocols. Similarly, it is possible to define M2M as a communication between devices without (or limited interaction) human interaction. In general, for decisions there is a control systems or a computer. M2M allows wireless or wired systems those are identical to communicate between each other. Since there is no human interaction it is estimated for near future that without human interaction machines will have specific environments to communicate between each other faster as well. Thus, it will increase data traffic greatly with faster connections [18].



Figure 2.12 Representation of the Machine to Machine Concept [19]

So far, such concepts information technologies, electronic communication have considered for human to machine communications. Nowadays there is even no human existence for some applications. Mostly they are existing as observer. For many applications machines communicate directly with other machines. This process of development and changes are given in the table 2.1[18].

Table 2.1 M2M Development and Change Process [18]

Human to Human (H2H)	Human to Machine (H2M)	Machine to Machine (M2M)
Telephone (voice, video)	Electronic/Distance learning	Telemetry
Messaging	Electronic marketing/Banking	Telematics
File Sharing	Telemedicine	Tele Healthcare
Video, music Sharing	Electronic Public Services	Smart Roads/ Cars
Mutual Gaming	Electronic Business Systems	Smart Homes, Buildings

2.3.1 Machine to Machine Applications

Wide band wired and wireless connections flexibility and day by day developing devices make possibility to use M2M concept for many application areas.

M2M technology allows to management and monitoring devices as wireless on such systems. Those are mainly health, transport, public sectors and traffic systems, logistic, electricity, water, natural gas meters, smart grids, smart buildings, home appliances, medical automation, telemedicine, ATM, sale points, critical sale infrastructures, smart farming applications, visualization and control systems and so on [18].

General Machine to Machine applications over the world;

- Logistics and transportation; GPS vehicle tracking, position detection.
- Remote tracking systems; Data acquisition, transmit, receive and analyze.
- E-metering systems; Electric, water, natural gas meters, data acquisition, reporting and analyze.
- Security systems; Region tracking, distance data acquisition, emergency case reporting.

- Defense industry; Remote weapons.
- Factories; Stock reporting, production conveyors control, periodical reporting.
- Farming and agriculture; Natural events tracking, air, humidity, pressure, temperature analyze, positioning for farm animals, farm animals tracking and feeding systems.
- Healthcare; Patient health activity tracking, measurement and reporting health activities for risky patients.
- Supply chain; Self-controlled autonomous warehouses, smart robots for shipping and logistic. [18]

As we have seen there are many application areas for machine to machine technology. Also, day by day these areas are expanding. For future, it is expecting to have more connected and autonomous world.

2.4 Future of The Internet of Things

As we have seen in the previous sections internet of things applications increasing day by day. It is expected that there will be 50 billion connected devices by 2020. According to this expectation required infrastructure need to be prepared by the responsible authorities and people need to get ready for this change. It is expected to form this future around few concepts.

2.4.1 Platforms

Platform is the key for future of the internet of things. Manufacturers will focus on producing internet of things platforms that will make them inexpensive. Thus, it will be possible to see more applications for the internet of things. It will also make people and societies willing to do internet of things applications.

2.4.2 Microprocessors and Architectures

For future of the internet of things architectures are also important. New internet of things supported microprocessors and architectures will make internet of things applications easier comparing to conventional architectures.

2.4.3 Operating Systems

Operating systems are main part for software. It is also valid for internet of things applications. There are also few operation systems those are compatible with internet of things applications. For the future, number of these kind of operation systems will increase. Thus, it will allow to develop easier and robust software's for internet of things applications.

2.4.4 Standards and Ecosystems

Defining new standards and make ecosystems for internet of things applications will solve some issues those are sourced by authorities and laws. These will also make certain borders for internet of things concept.

2.4.5 Security

Security is an important factor for all devices which are connected to the internet. By internet of things side it will play a key role also. To provide secure communications amongst IoT devices there will exist used and new security applications within internet of things devices as software and hardware. Therefore, internet of things applications have a bright future. Furthermore, development process of the internet of things needed to be well managed and considered about all possible issues in terms of health of the IoT.

CHAPTER 3

BATTERY MANAGEMENT SYSTEMS

Batteries are devices those can storage electrical energy. Beginning from the first invention in 1800's so far they have shaped the technology as well. Nowadays from toys, mobile phones, personal computers, portable electronic devices, to bicycles, skates, vehicles, submarines, in many devices batteries are exist. Now batteries are indispensable for people and they will be more important for the future since rely on green energy over the world.



Figure 3.1 The First Chemical Battery [20]

Batteries are also shaped by the time. In figure 3.1 you can see the first battery voltaic pile that is invented by Alessandro Volta. It was an experimental and it took a time to see commercial applications of batteries by 1900's. Today as you can see batteries can be quite small and efficient. For example, mobile phones batteries, nowadays they are quite small and have more capacity comparing their old ancestors. Today it is also possible to recharge batteries for new uses.

Meanwhile with the development of batteries, they become a matter some issues about batteries such an efficiency, management and so on. Thus, people had studies to solve this issues by electronic systems.

3.1 What Is The Battery Management System?

Battery management system is an electronic system that manages battery cells. Battery management systems mainly aim to increase efficiency and life time of the battery cells. Battery management systems also charge/discharge battery cells, protect system against to overvoltage, over temperature, over current, monitor cell values such a voltage, current, temperature and so on. Additionally, battery managements systems could report status of the battery cells and send them or storage depending to application.

3.2 Battery Management System Functions

Main function for the battery management systems is efficiently charge and discharge battery cells. There are also some other functions for battery management systems those are could change depending the systems such measurements (air flow, humidity e.g.), protections. Further details those are related with the functions of battery management systems are given for next chapters.

3.2.1 Management

Management is the main task for the battery management system. Battery management system manages system in three ways;

- Balancing and Distribution; It aims to keep cell capacities as maximum as possible. Since balancing is a detailed issue for the battery management systems, it will be more details about balancing and distributing for next chapters.
- Protection; Keep battery cells conditions in a safety range to avoid damages battery cells cause temperature, overcurrent or over voltage.

- Thermal Management; Keep battery cells temperatures in a safety to avoid damage battery cells and to increase usage capacity as much as possible.

A basic battery management system at least provides these three functions. More enhanced digital battery management systems could provide more functional features [21].

3.2.1.1 Protection

A good battery management system can control whether battery cells operating in a safety area. Depending the situations battery management system can turn current drawing off or limit to avoid damage battery cells.

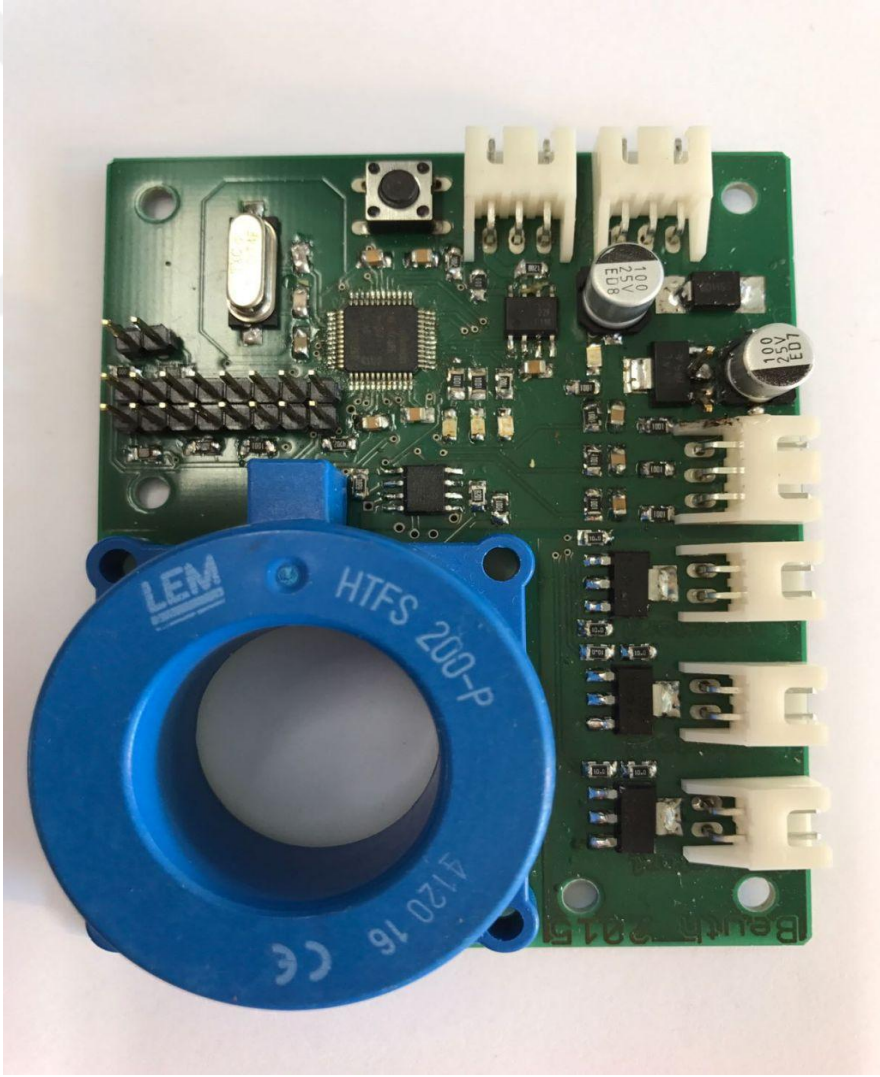


Figure 3.2 A Contactor Control Board Figure

A contactor control board, which is a part of the battery management system, is shown in Figure 3.2. It can control battery cells charge/discharge currents by turning its contactor on/off. Contactor control board has also current transducer. Thus, it can measure main current of the battery cells and turn the system of in case of emergency.

3.2.1.2 Thermal Protection

Battery cells have an operating temperature range. In case of exceeding this temperature range, it could damage battery cells and also could be dangerous for the environment. Temperature of the battery cells could change during the charge/discharge or by the climate conditions. Battery management system monitor battery cells temperatures and keep them between normal operating temperature ranges.

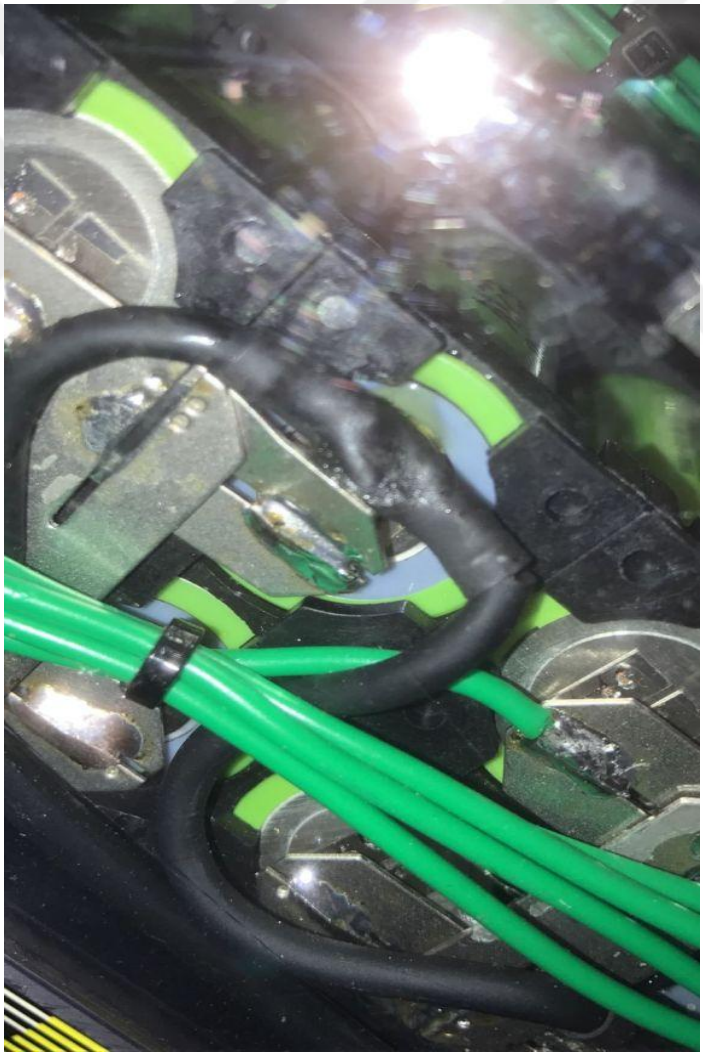


Figure 3.3 An Example Figure of Battery Cells with Temperature Sensors

Figure 3.3 shows an example battery cells package with temperature sensors those are close the cells. These sensor measure cell temperatures continuously. In case over temperature that can turn current flow off or turn cooler on by using contactor control board contacts.

3.2.2 Balancing Battery Cells and Distribution the Energy

Balancing is the key factor that affects efficiency directly. In a series connected battery cell packs, the cell that has minimum energy level comparing to other cells specifies the whole package energy level.

Characteristic specifications of battery cells could change by the time or by environmental conditions. Cells could have differences even in production even they are produced as an identical. These situations affect battery packs efficiency and charge/discharge conditions.

To overcome this issue battery balancing and distribution techniques use in the battery management systems. Battery balancing and distribution system aims to make all cells have an identical condition to provide best charge/discharge process and efficiency. In battery management systems balancing separated mainly into two sections.

- Passive Battery Balancing; Consumes more energy on the battery cells by resistors. Passive balancing consumes more energy on the battery cells but system cost is cheaper comparing to active balancing.
- Active Battery Balancing; Distribute more energy on the battery cells to other battery cells. Active balancing could save more energy by distributing to other cells

3.2.2.1 Passive Balancing

Passive battery balancing technic based on more energy passing away by converting into thermal energy by resistors. When this technic applied after charging, the cell is taken as a reference that has minimum energy level comparing to other cells. Then the other cells are discharging to have same energy level with this cell. Additionally, when this technic applied during the charge, when one of the cell in the pack has reach the maximum charge level and others do not than charging takes a break for a while and all

cells energy levels in the package decreasing to make energy levels same with the cell that has lowest energy level. Then charging continues.

Figure 3.4 shows two battery cells voltage-time graph those are charging by using passive battery balancing technique [22].

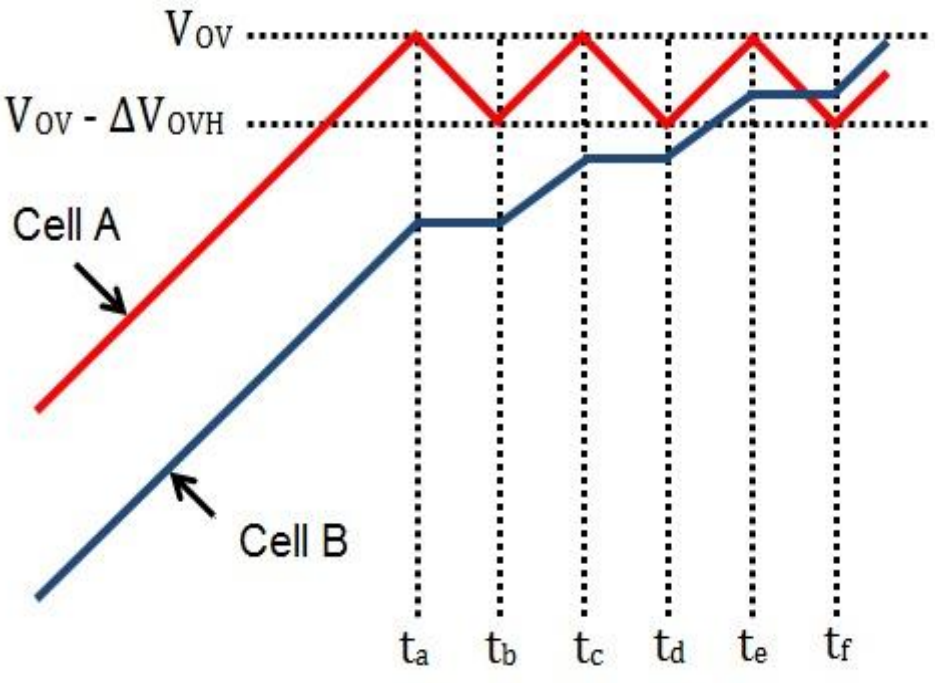


Figure 3.4 Voltage-Time Plot Two Cells During Charge [22]

Figure 3.4 shows two serially connected battery cells voltage levels those are charging. Initially they have different energy levels. Cell A that has more energy initially reaches first to maximum energy point (V_{OV}) at t_a that is also point to cut down charging. At that point since cell A has more energy charge process cutting down and some of energy of cell A consuming by load resistors. At time t_b charge process starts again. Cutting down charge process and discharging amount of energy of the cell A is repeating again at time between t_c and t_d and t_e and t_f. Thus, when charging process is complete energy differences between cells remains under the acceptable level [22].

Figure 3.5 shows general block diagram of passive battery balancing systems.

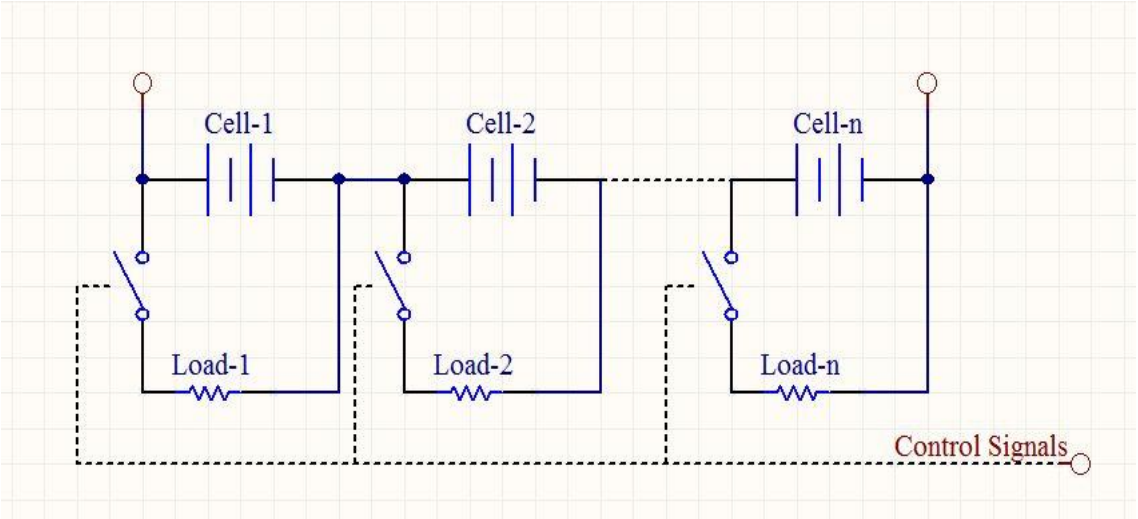


Figure 3.5 Passive Battery balancing General Block Diagram

Passive battery balancing is simple methods but beside this simplicity it is consume more energy by using dummy loads. That decreases efficiency of the battery management system. Also, passive battery balancing circuits are less complex and inexpensive systems comparing to other balancing systems. Therefore, passive battery balancing systems could be used in the systems those efficiency of the systems is less important than the system cost.

3.2.2.2 Active Battery Balancing

Doubtless for some cases efficiency of the battery management system could be more important than cost of the system. In these cases, active battery balancing and distributing systems comes ahead.

Active battery balancing technique based on that in a battery management system energy of the cell that has more energy than the other cells distributing to the other cells. Thus, system saves the more energy and recycle. Although active battery balancing has more efficiency than the passive balancing it brings more complexity and cost to dosing battery management system.

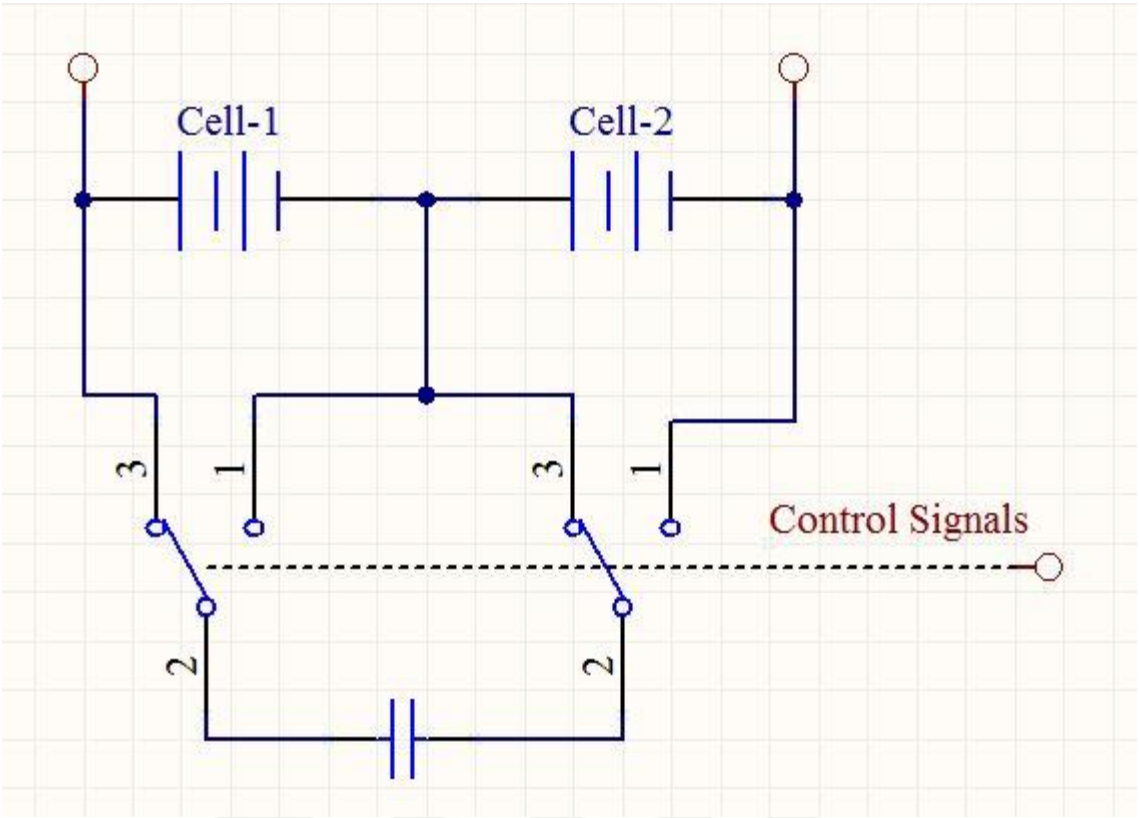


Figure 3.6 Time Switching Capacitor Technique

Transferring more energy on the cells could be done by switching capacitor technique, it is also possible to use some other techniques those are fast as well such voltage boost techniques.

Figure 3.6 shows time switching capacitor technique operation. It switches capacitor between cells by using switches. For example, assume that cell-1 and cell-2 are identical and cell-1 has more energy than the cell-2. In that case, we need to transfer more energy of the cell-1 to the cell-2. First switches are positioning to state 3. Thus, amount of the energy of the cell-1 transferring to the capacitor till capacitor voltage reaches to the cell-1 voltage level. Then switches are positioning to state 1 to charge cell-2 by the capacitor that has more energy of the cell-1. This process continues till both cells have same energy level.

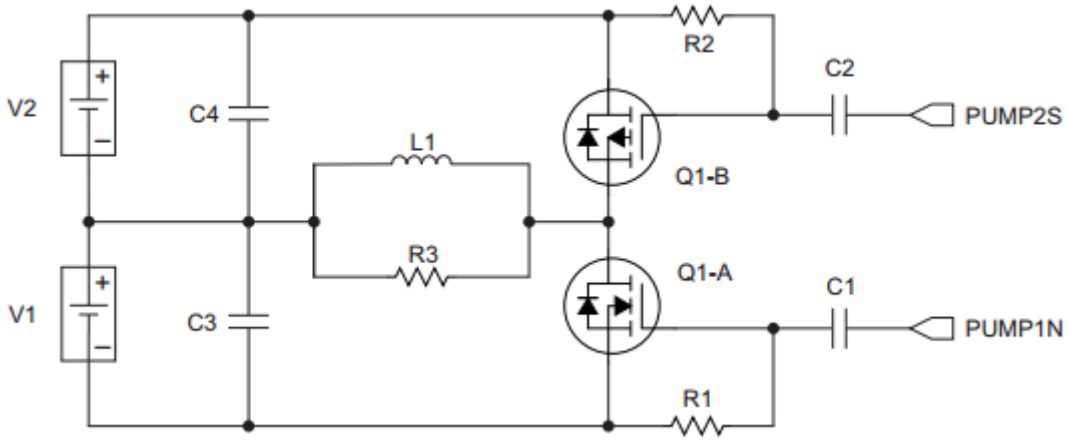


Figure 3.7 PowerPump Example Circuit – Pump Cell South(P2S) [23]

Nevertheless, time switching capacitor technique is easier and better comparing to other techniques it is not preferred often due to it has slow response. Therefore, other active balancing techniques could be preferred.

Figure 3.7 shows an example PowerPump circuit as an alternative active battery balancing technique. PowerPump technique uses boost regulator structure to transfer more energy between cells for balancing operation.

As we have seen in previous sections battery balancing and distributing is an important issue for battery management systems. At the same time, it is possible to realize battery balancing in many techniques. Depending on the application needs preferred technique could be used.

3.2.3 Measurement in Battery Management Systems

Measurement is an important task for electronic systems. By measurement electronic systems get physical changes as an input from the environment such a temperature, humidity e.g. According to these inputs electronic systems generate control outputs. For example, electronic heater can measure temperature by sensor and drives the heater to control ambient temperature.

For battery management systems measurement is also important. There are some values for the batteries those needed to be measure by the battery management systems. Mostly those values are, battery pack or cells voltage, battery pack or cells currents, battery pack, cell or ambient temperatures e.g. Depending to system such humidity, air flow measurements might be need.

3.2.3.1 Voltage Measurement

Battery management systems supposed to measure all battery cells voltages including battery pack voltage. These measurements required during the run time of the battery management systems. Thus, battery management system can understand charge or discharge status of the battery pack by measuring battery pack voltage. Similarly, to realize balancing for the battery cells battery management system measures all cell voltage separately. Then it can decide which cell need to be charge or discharge.

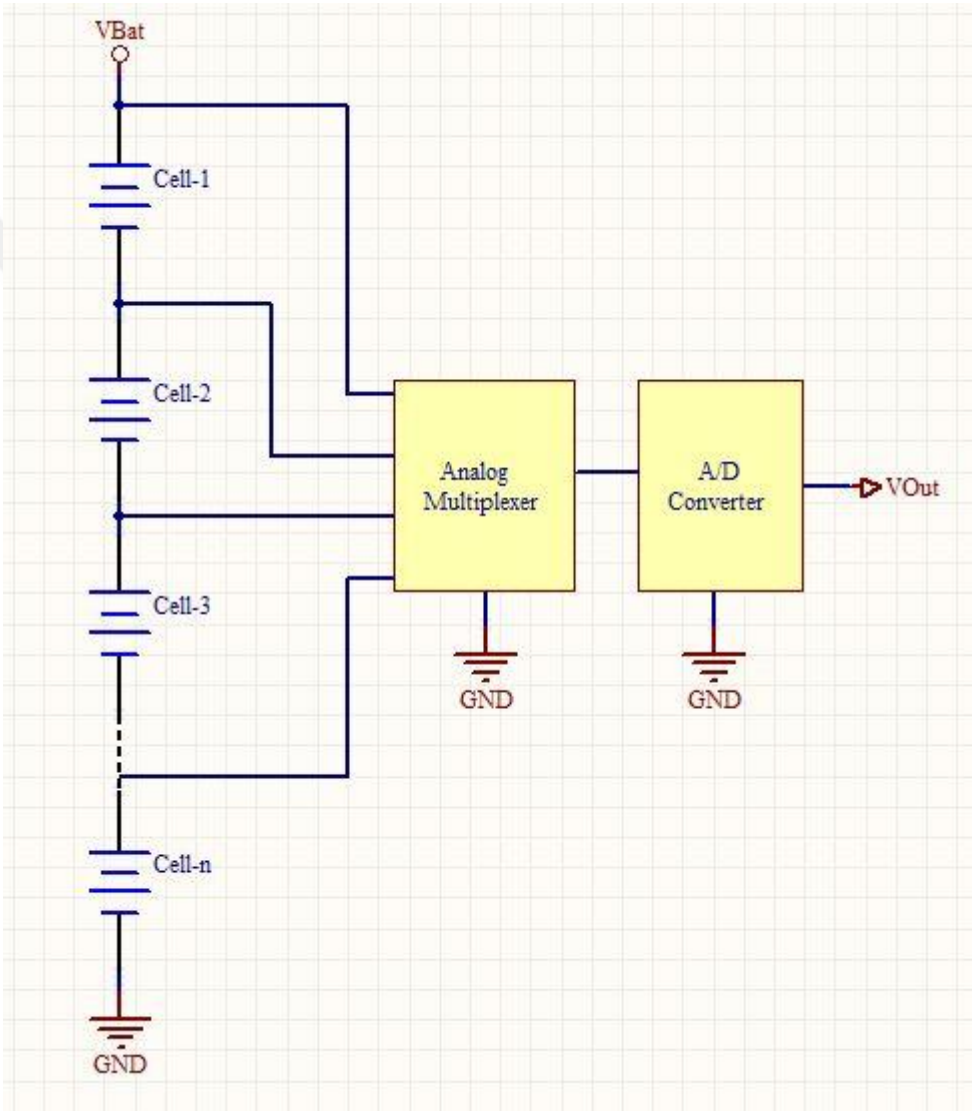


Figure 3.8 An Example Battery Cells Voltage Measurement

Figure 3.8 shows an example battery cell voltage measurement circuit. By using analog multiplexer all battery cell connection point voltages and battery pack voltage can be measured using single A/D converter. For example, to measure Cell-1 voltage it is requires to measure voltage of two points of the Cell-1. Since A/D converter referencing

ground potential by subtracting these two points' voltage values give us Cell-1 voltage. Thus, all cell voltages and battery pack voltage can be measured.

3.2.3.2 Current Measurement

According to battery cell specs battery management system supposed to control current value of the battery cells during charge. Also, it supposed to control current value of the cell to avoid overcurrent consumption during discharge. Therefore, current measurement is an important for the battery cells.

There are many ways to measure battery cell currents. Mostly used method is using shunt resistor to measure cell currents.

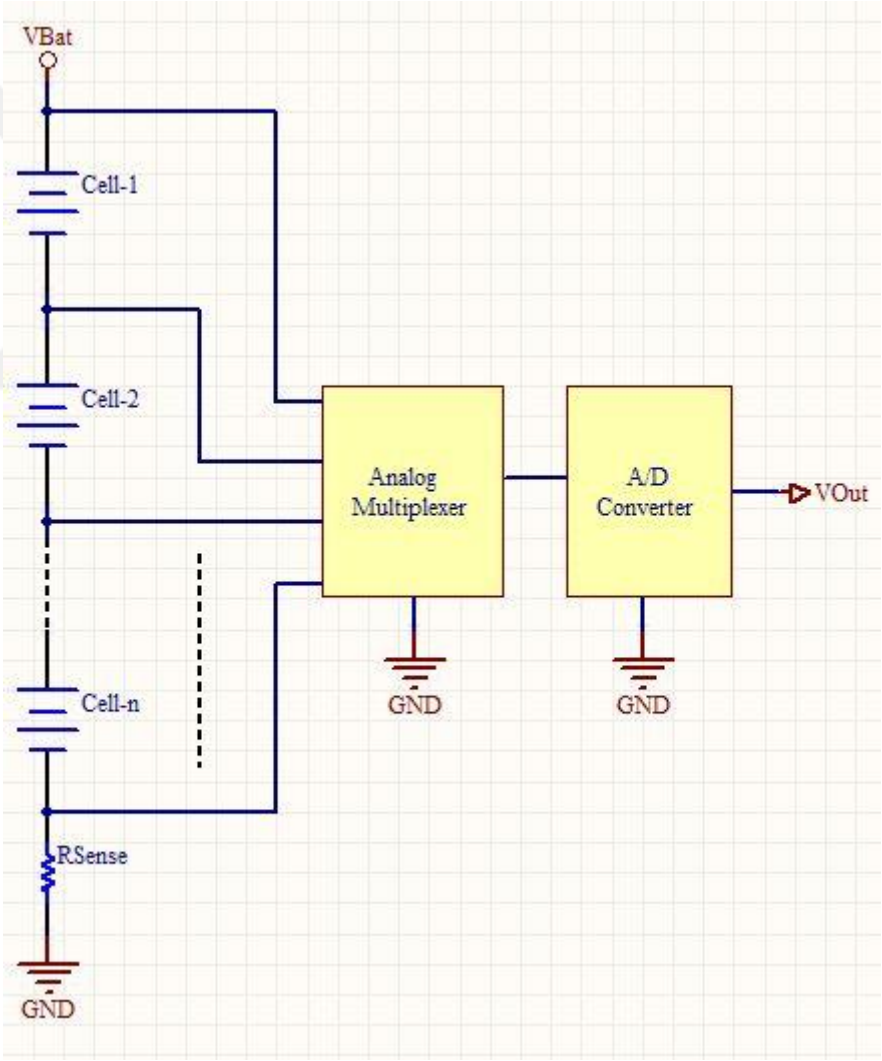


Figure 3.9 An Example Battery Cells Voltage and Current Measurement

Figure 3.9 shows an example measurement system to measure battery cell voltage and currents. To measure current RSense shun resistor used. This resistor connected as

serial to all battery cells. When voltage drop on the RSense measured it is possible to calculate current value for battery cells. Since current values are same for the serial connected cells. It is enough to measure battery pack current. RSense resistor value should be small as much as possible to avoid drop more voltage on to RSense that affects other cells.

Shunt resistor technique is cheap and simple as well. Beside these benefits it is not isolated and affect voltage levels of battery pack since it is connected as serial to battery pack. Depending to application it is also possible to use hall effect sensors to measure current.



Figure 3.10 LEM HTFS 200-P Current Transducer

Figure 3.10 shows picture of the LEM HTFS Current sensor. LEM HTFS sensor uses hall effect measuring principle to measure current. It can measure current without electrical connection. It measures current of the wire that passing through the sensor by measuring its electromagnetic filed. According the current value, it gives an analog voltage output. That voltage output could be measured by an A/D converter. Hall effect principled current sensors are expensive comparing to shunt resistors but they are isolated and can be used for high current levels.

3.2.3.3 Temperature Measurement

Temperature measuring is an important for battery management systems. A well battery management system supposed measure temperature of each cell in the battery pack. Additionally, it would be better to measure battery pack temperature or an ambient temperature.

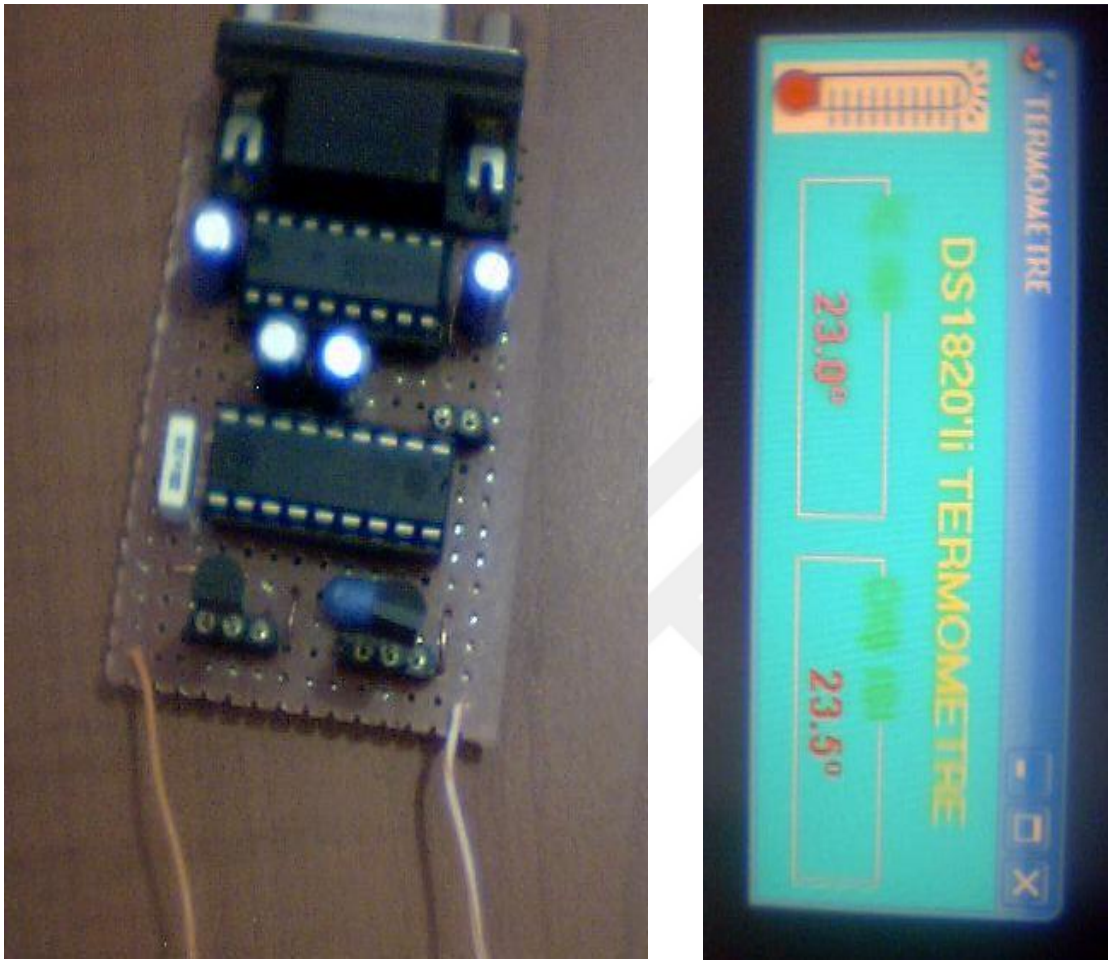
Battery cells temperatures should be between nominal values during charge or discharge. Battery pack temperature could be increased since overcurrent consumption or short circuit. Also, battery cells in the battery pack could have high temperature due to malfunction or specific fault. Thus, battery management system should measure temperature for the battery cells.

For temperature measurement, there are many sensors such a digital, analog, thermistors (NTC, PTC) etc. To measure each cells temperature requires many temperature sensors. For cost sensitive applications cheaper temperature sensors will be required. Meanwhile cheaper sensors will not be better than expensive ones. Additionally, some analog sensor could be cheaper since they don't require A/D converter to using in digital systems such a microcontroller e.g. Depending to application need appropriate temperature sensor could be chosen.



Figure 3.11 Some of Temperature Sensors[21]

Figure 3.11 shows some of mostly used temperature sensors in applications. To measure battery cells temperatures correctly sensor needed to be placed as close as possible to cells. Thus, temperature sensors mostly have a proper package to be well fitted. Also, they should not be affected by other heat sources.



(a) (b)

Figure 3.12 An Example Temperature Measurement System: (a) Hardware part of the System, (b) Computer Interface of the System

Figure 3.12 shows representation of an example temperature measurement system. As you can see system has two identical temperature sensors also digital. Temperature measurements could be monitored by the computer application. It is same for battery management systems. Using similar hardware's and sensors depending the application needs battery cells temperatures can be measured and monitored.

3.3 Battery Management System Topologies

Battery management systems could be varied in conditions such a performance, price, size. Therefore, there is not an only a way to design well fitted battery management system. There are few battery management system topologies commonly used.

- Centralized Battery Management Systems: All system blocks controlled by a single controller.
- Distributed Battery Management Systems: Each cell of the battery pack has a controller those connected each other via cables.
- Modular Battery Management Systems. System consist of modules those can control number of cells or have a specific task for the BMS.

These topologies could be varied, mixed or more according the application needs. There are no strict borders.

3.3.1 Centralized Battery Management Systems

In centralized battery management system, each system components have placed around the main controller. Each cells of battery pack are connected to main controller via wires.



Figure 3.13 An Example Centralized Battery Management System [24]

Figure 3.13 shows an example centralized battery management systems. It has all components in one electronic mainboard and have connectors to connect cells of the battery pack.

Due to centralized battery management systems use a single controller that reduces system cost but meanwhile decreases systems complexity and makes system installation difficult.

3.3.2 Distributed Battery Management Systems

Distributed battery managements systems use dedicated control module for each battery cells of the battery pack. There is not a main controller that control all cells.

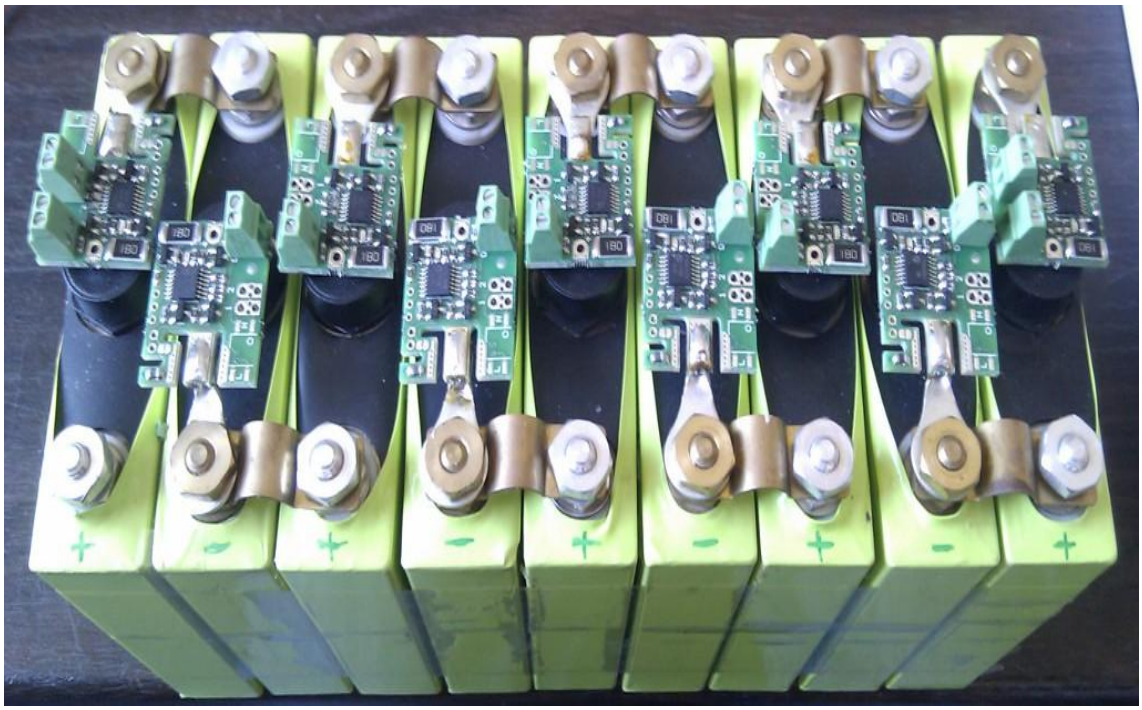


Figure 3.14 An Example Distributed Battery Management System [25]

Figure 3.14 shows an example distributed battery management systems. As you can see each cell of the battery pack has a simple electronic controller board. These controller boards can control their own cells and measure values such a temperature, current and voltage. According to application dedicated controllers can communicate between each other or they can be connected to a master controller as a slave to collect all cells data in one place.

Meanwhile, distributed battery management systems have a flexible structure that allows to decrease or increase battery cells of the pack easily. Maintenance and fault

detection is also easier in distributed battery management systems. Since distributed battery management systems have a dedicated controller they are more expensive comparing to other battery management systems. When the flexibility required using distributed battery management system would be beneficial.

3.3.3 Modular Battery Management Systems

Modular battery management systems consist of several modules those can control battery cells separately or have specific tasks in the battery management systems such a balancer module, current measurement module.

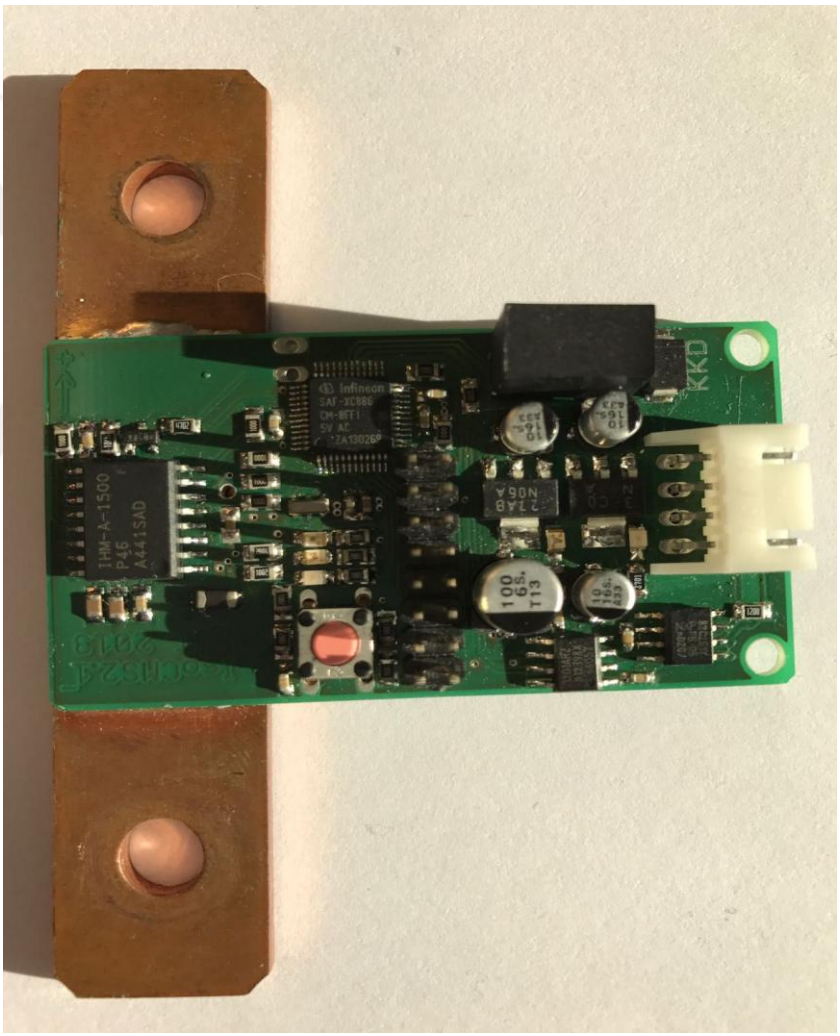


Figure 3.15 Current Measurement Module for Modular Battery Management Systems

Figure 3.15 shows current measurement module for modular battery management systems. Module has a connector for power and to communicate with other modules.

Module can measure current of the battery pack and send it over CAN bus communication.

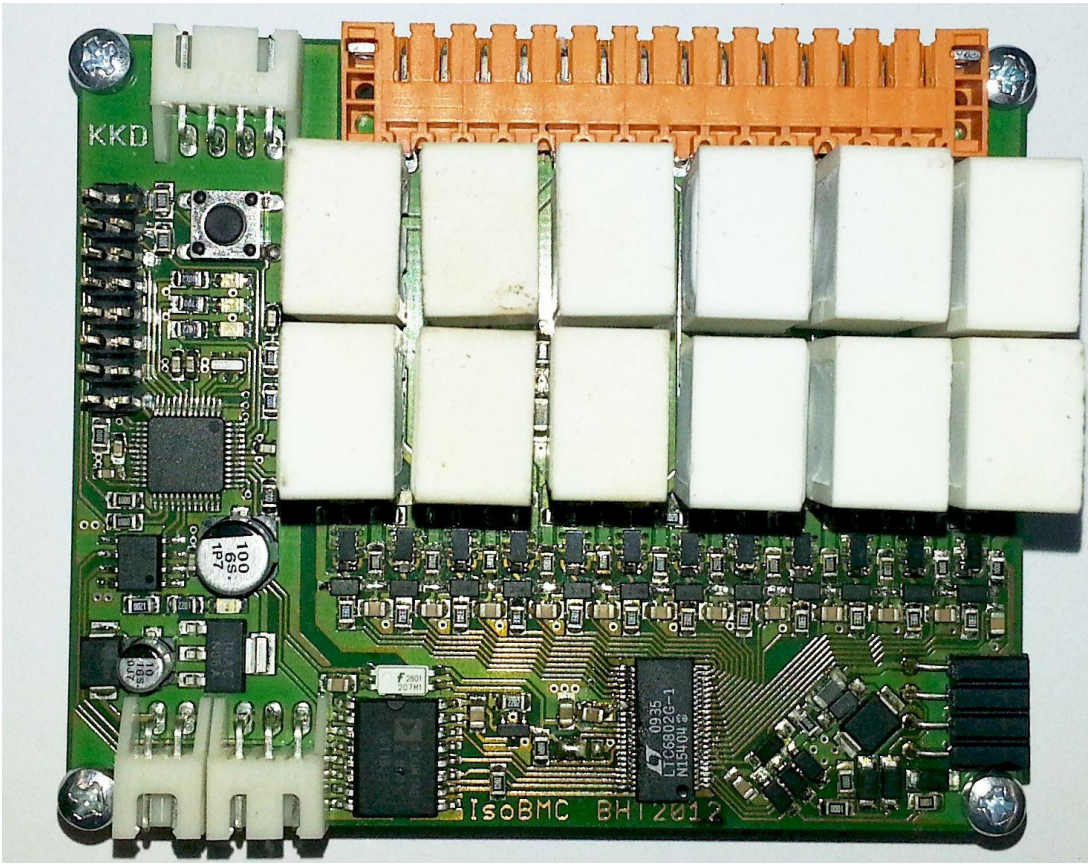


Figure 3.16 Battery Balancer and Voltage Measurement Module for Modular Battery Management Systems

Figure 3.16 shows battery balancer and voltage measurement module for modular battery management systems. Module can make passive balancing for the cells and can measure cell voltages. Module can communicate with the other modules via CAN bus communication. As you can see whole battery managements components consist of modules. Modular systems could have more cost comparing to other systems but modularity brings flexibility and easy installation that could make sense depending application.

As you can see all battery management system topologies have an advantages and disadvantages. Depending the application needs one of these topologies can be used for optimum solution.

CHAPTER 4

DESIGN OF BATTERY MANAGEMENT SYSTEM MAIN CARD

This chapter covers all technical and design details of the internet of things based battery management system main card. Design technics, used components and technologies, design layouts, electronics circuit designs, features, innovates and more details are given.

4.1 Block Diagram and Features

The internet of things based battery management system main card has many features and new design. The most important feature of the main card is an IoT (Internet of Things) platform. Main card has an IoT platform that gives the main card wireless internet ability for internet of things applications.

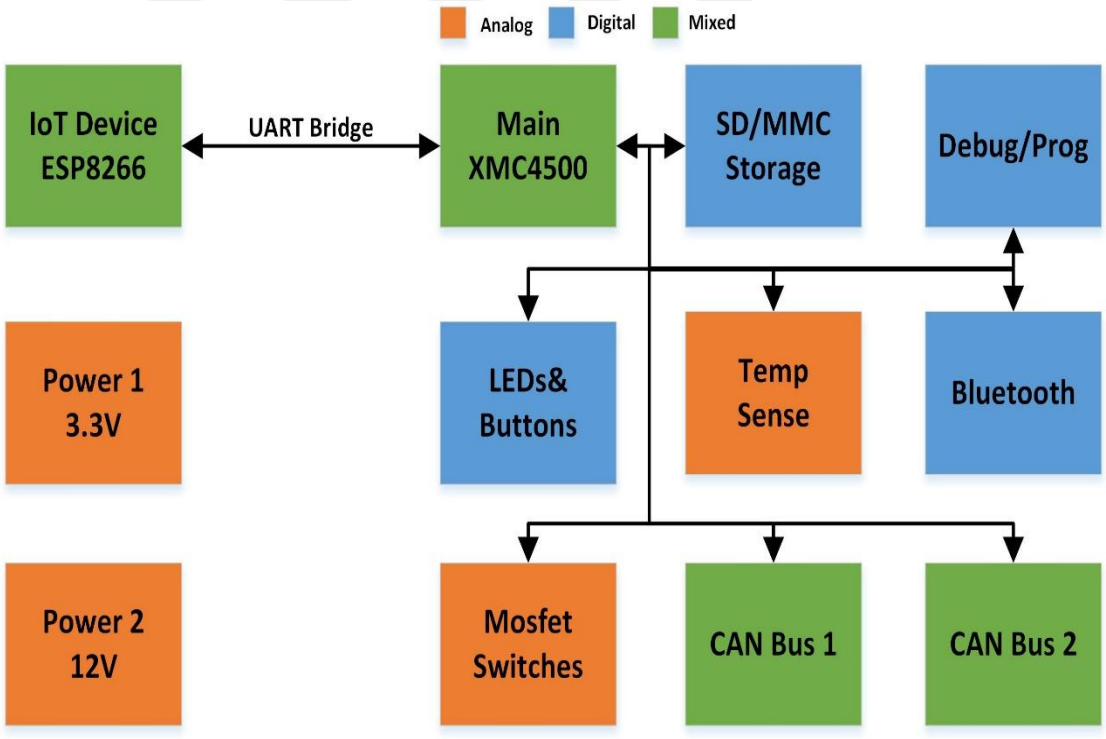


Figure 4.1 IoT Based Battery Management System Main Card Block Diagram

Figure 4.1 shows block diagram of the internet of things based battery management system main card. It has designed for modular battery management systems also to add them internet ability for the internet of things applications.

Internet of things based battery management system main card also has a modular structure inside of it. Some of features of the main card are listed below.

- Powerful XMC4500 ARM® Cortex®-M4 Industrial Microcontroller Unit
- Included IoT Platform(ESP8266)
- 2 channels CAN Bus Interface
- SD/MMC Card Storage for Data Logging
- Bluetooth Connection for Smart Devices
- Low RDS_{ON} Mosfet Switches for Battery Pack or General Purposes Control
- Temperature Sensors Interface to Measure Battery Cells Temperatures
- General Purposes LEDs and Push Buttons
- 2 Internal Power Domains
- Able to Operate with Main Battery Package Voltage

The new battery management system main card has many features including IoT platform. IoT platform gives it many abilities such wireless internet connection, wireless monitoring, over the air update and so on.

4.1.1 Main Controller

The IoT based BMS (Battery Management System) main card has a XMC4500 series microcontroller as a main controller. Main controller manages all communications between CAN busses, IoT platform, Bluetooth module, controls switches, LEDs, buttons, SD/MMC card storages and so on.

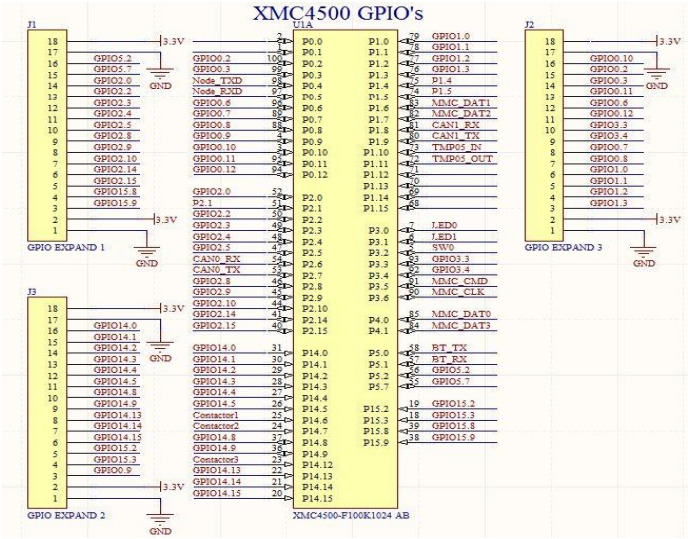


Figure 4.2 IoT Based BMS Main Controller Detailed Circuit Schematic

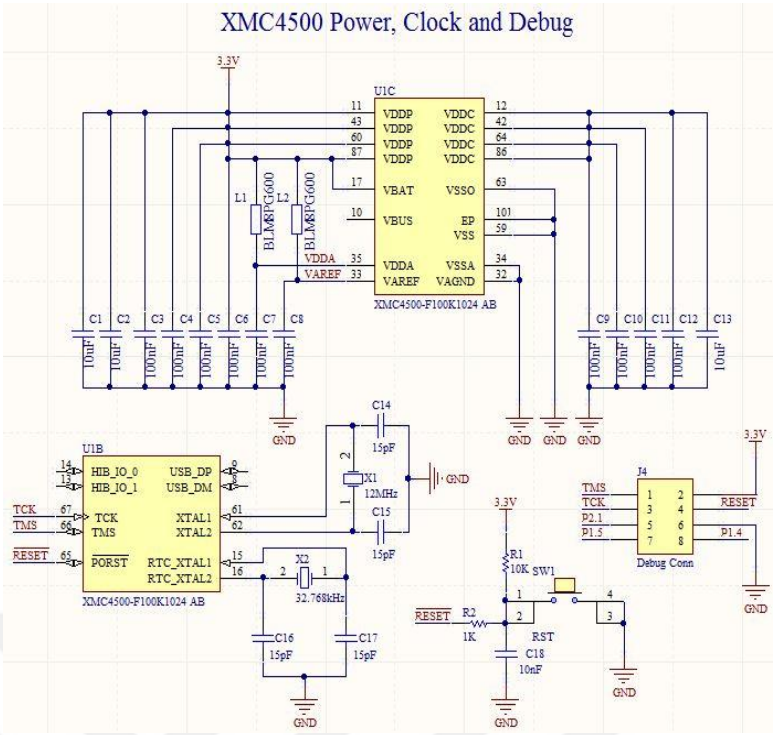


Figure 4.3 IoT Based BMS Main Controller Detailed Circuit Schematic

Figure 4.2 and 4.3 show detailed circuit schematic of the main controller of the main card. It has 100-pin package XMC4500-F100K1024 microcontroller which has ARM® Cortex®-M4 microprocessor unit.

4.1.1.1 XMC4500 Series Microcontrollers

XMC4500 is a series of high performance microcontrollers for industrial applications from Infineon Technologies company. XMC4500 microcontrollers include ARM® Cortex®-M4 microprocessor core including float point unit and DSP (Digital Signal Processing) features and useful peripherals that are optimized for performance. With well suited development environments it increases productivity and reduce production time. XMC4500 series devices are optimized for industrial connectivity and sense & control applications.

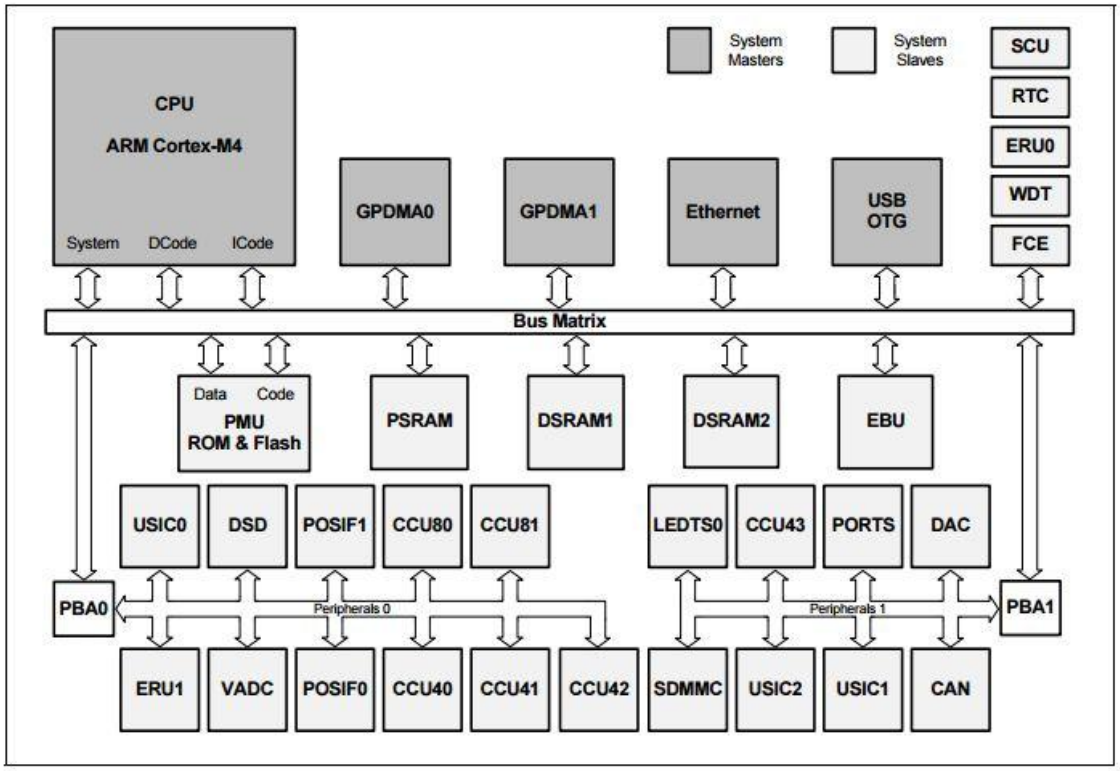


Figure 4.4 XMC4500 Series Microcontrollers Block Diagram [26]

Figure 4.4 shows XMC4500 series devices block diagram. Some of the features of the XMC4500 devices are listed below.

- CPU Core
  - High Performance 32-bit ARM Cortex-M4 CPU
  - DSP/MAC Instructions
- Floating Point Unit
- Memory Protection Unit
- Nested Vectored Interrupt Controller
- 1024 KB on-chip Flash Memory with 4 KB instruction cache
- Controller Area Network interface (MultiCAN)
- SD and Multi-Media Card interface (SDMMC) for data storage memory cards
- UART, double-SPI, quad-SPI, I2C, I2S and LIN interfaces
- Four Analog-Digital Converters (VADC) of 12-bit resolution
- Digital-Analogue Converter (DAC) with two channels of 12-bit resolution

- Two Capture/Compare Units 8 (CCU8) for motor control and power conversion
- Window Watchdog Timer (WDT) for safety sensitive applications
- Real Time Clock module with alarm support
- Programmable port driver control module (PORTS)
- Full support for debug features: 8 breakpoints, CoreSight, trace
- Various interfaces: ARM-JTAG, SWD, single wire trace [26]

Due to many features, such reliability, flexibility and performance, XMC4500 series of microcontroller have chosen for the main controller of the internet of things based battery management systems main card.

4.1.2 Internet of Things Platform

Internet of things platform is one of the most important part of the main card. Internet of things platform gives a wireless internet ability to battery management system. There are many possibilities with an IoT platform for the battery management system. These possibilities are wireless monitoring of the battery management systems, distance control via internet, over the air update and so on.

Internet of things based battery management system main card contains an ESP8266 SoC solution as an IoT platform. This platform can communicate with the main controller of the main card via UART (Universal Asynchronous Receiver Transmitter) bridge as duplex.

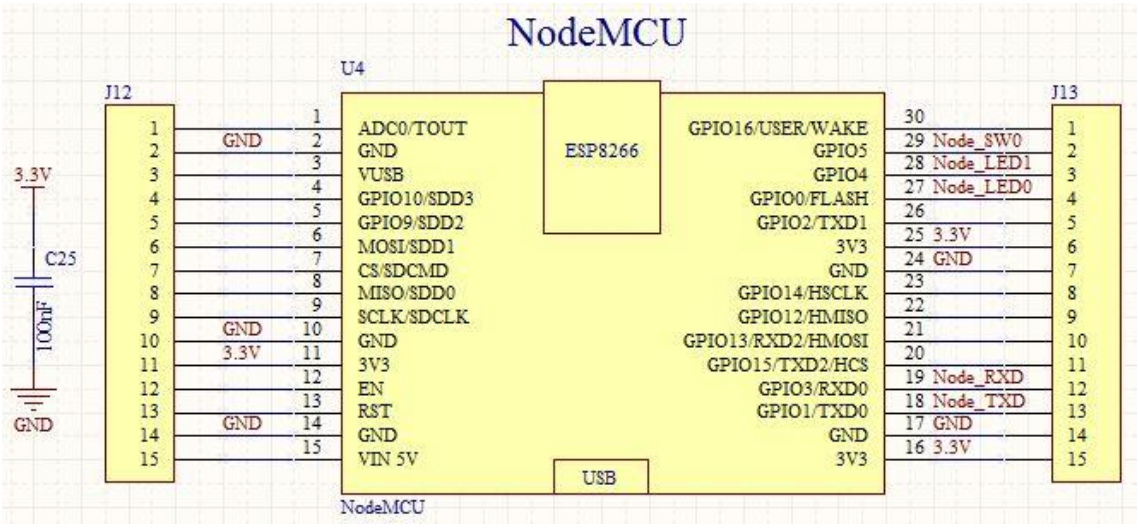


Figure 4.5 IoT Platform Part Schematic of the Main Card

Figure 4.5 shows IoT platform schematic of the BMS main card. IoT based BMS main card uses ESP8266 based NodeMCU hardware as IoT platform. NodeMCU is an open source platform well suited for the internet of things and cost sensitive applications.

4.1.2.1 ESP8266

ESP8266 is a low-cost Wi-Fi enabled SOC solution well fitted for the internet of things applications from Chinese based Espressif Systems company. ESP8266 just need few external components for the minimum requirements.

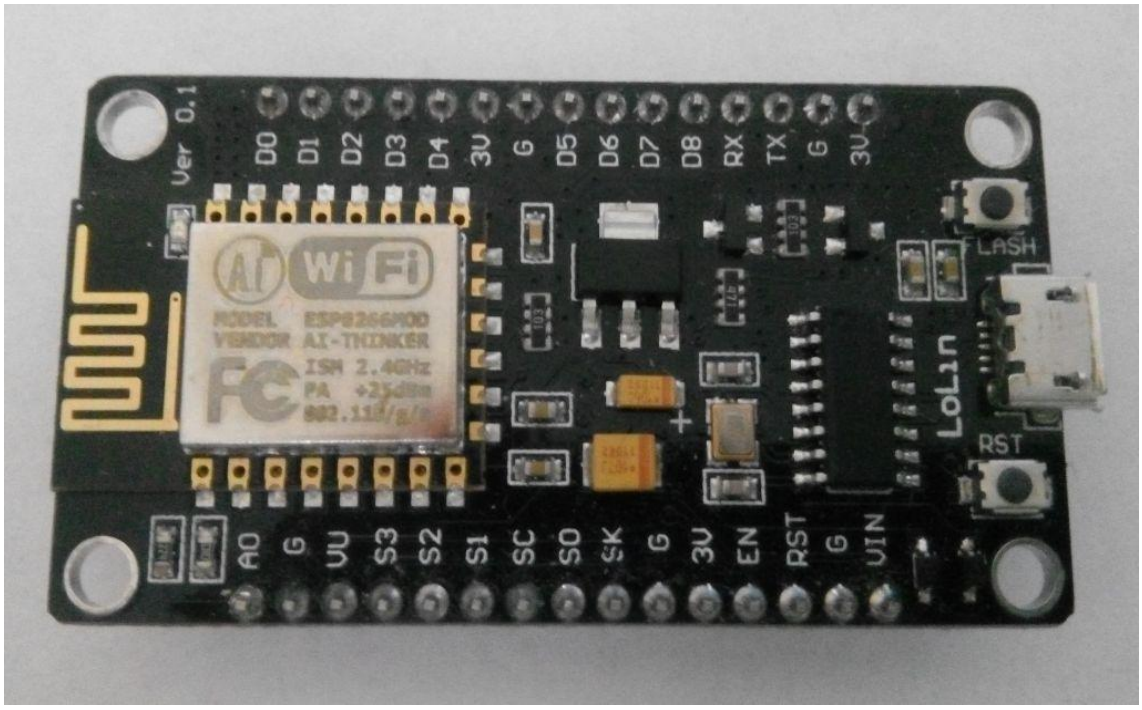


Figure 4.6 ESP8266 Based ESP-12 IoT Platform

Figure 4.6 shows an ESP-12 IoT platform that is also called as NodeMCU. ESP-12 is an ESP8266 based low cost Wi-Fi enable IoT solution. Due to ESP8266 has many features with low cost it is one of the most popular platform for the internet of things applications. Some of ESP8266 features are listed below.

- 32-bit RISC CPU: Tensilica Xtensa LX106 running at 80 MHz
- 64 KB of instruction RAM, 96 KB of data RAM
- IEEE 802.11 b/g/n Wi-Fi with Full TCP/IP Stack
    - Integrated TR switch, balun, LNA, power amplifier and matching network
    - WEP or WPA/WPA2 authentication, or open networks

- External QSPI flash - 512 KB to 4 MB
- 16 GPIO pins
- I²S interfaces with DMA (sharing pins with GPIO)
- UART, SPI, I²C Interfaces
- 10 Bit ADC [27]

Main controller of the BMS main card communicates with the ESP-12 IoT platform via UART bridge. Main controller can send or receive all required data via UART to the ESP8266. ESP8266 uses MQTT communication protocol for wireless communication with other devices to send or receive data for the main controller. MQTT is a useful communication protocol for the internet of things applications.

Due to UART is an asynchronous communication IoT platform and XMC4500 main controller must use same baud rate for communication. For XMC4500 the standard setting is given by CTQSEL = 00B (fCTQIN = fPDIV) and PPPEN = 0 (fPPP = fPIN). Under these conditions, the baud rate is formula given at equation 4.1[28].

$$f_{ASC} = f_{PIN} * \frac{1}{PDIV + 1} * \frac{1}{PCTQ + 1} * \frac{1}{DCTQ + 1} \qquad (4.1)$$

4.1.2.2 MQTT

MQTT stands for MQ Telemetry Transport. It is a publish/subscribe, extremely simple and lightweight messaging protocol, designed for constrained devices and low-bandwidth, high-latency or unreliable networks. The design principles are to minimize network bandwidth and device resource requirements whilst also attempting to ensure reliability and some degree of assurance of delivery. These principles also turn out to make the protocol ideal of the emerging “machine-to-machine” (M2M) or “Internet of Things” world of connected devices, and for mobile applications where bandwidth and battery power are at a premium [29].

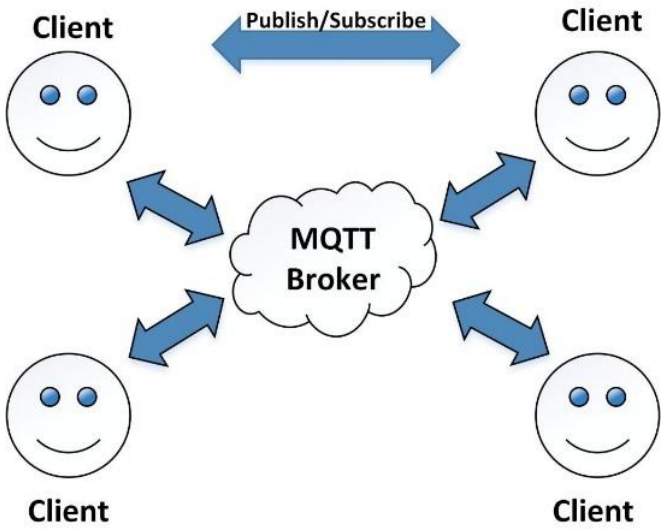


Figure 4.7 MQTT Basic Block Diagram

Figure 4.7 shows MQTT basic block diagram. Broker and client consist of MQTT system. Clients send publish messages to broker. Broker guarantees to send these messages to related subscribers. Similarly, clients get messages by their registered publishers via broker. Broker application could be a web service or an application that run on a server or a personal computer.

IoT platform in the battery management main card uses MQTT messaging protocol to communicate other devices via internet. Main controller sends messages about battery management system to IoT platform via UART bridge and IoT platform publish these messages to relevant subscribers in secure, reliability and robustness.

4.1.3 CAN BUS Interfaces

CAN bus (Controller Area Network Bus) is a communication protocol developed by Robert Bosch company in the early 1980. CAN bus allows microcontroller and devices to communicate between each other without host controller.

Due to CAN bus safety and robustness, many applications in industry, mostly in automotive systems use CAN bus communication protocol to communicate between each other. It is well suited protocol for safety critical applications.

Since its many features, IoT based battery managements system main card also uses CAN bus communication protocol to communicate with the other modules such a Current sensing module, Voltage measurement module and so on. Main card has two

CAN bus interfaces. Thus, main card can communicate with other modules and collect data from other modules.

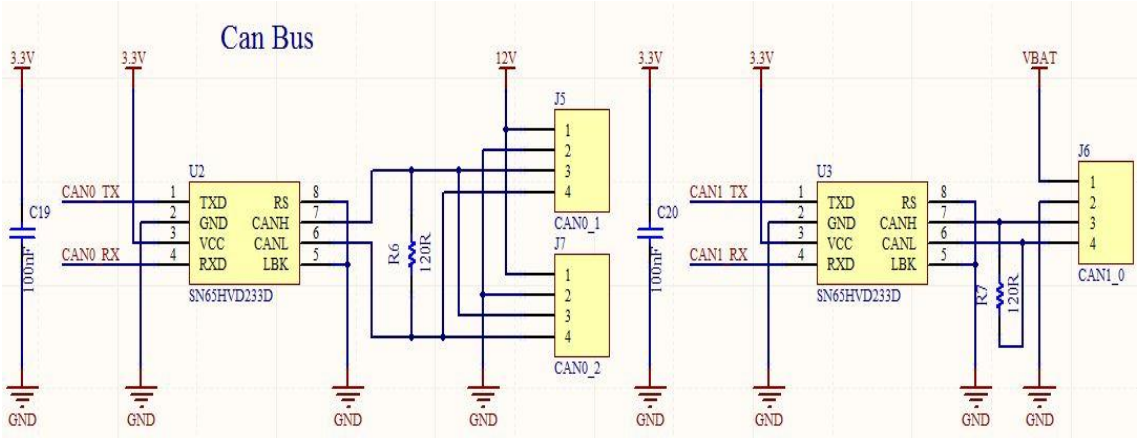


Figure 4.8 CAN Bus Interface Schematic Diagram

Figure 4.8 shows CAN bus interface schematic diagram of the main card. Main card has two CAN bus interfaces that provides to separate some modules those are critical to communicate as private with the main controller. CAN bus also well suited communication protocol for modular battery management systems. It allows to communicate all modules those have CAN bus interface with the main card.

4.1.4 SD/MMC Card Storage

SD/MMC cards present huge nonvolatile storage areas in small size chips these are also able to communicate easily with microcontroller, portable devices or such devices. Thanks to developing technology sizes of storage cards are getting increase. Currently it is possible to see storage cards with 128GB storage area. Thus, SD/MMC cards can storage various data according to application such logging data, images, videos and so on.

As IoT based battery management system main card can send system data through IoT platform it can also storage systems data such cell voltages, currents, temperature values and so on. Main card has a SD/MMC card interface to storage data into SD/MMC card. It also makes easier to transfer system data to other device such computers, tablets smart phones.

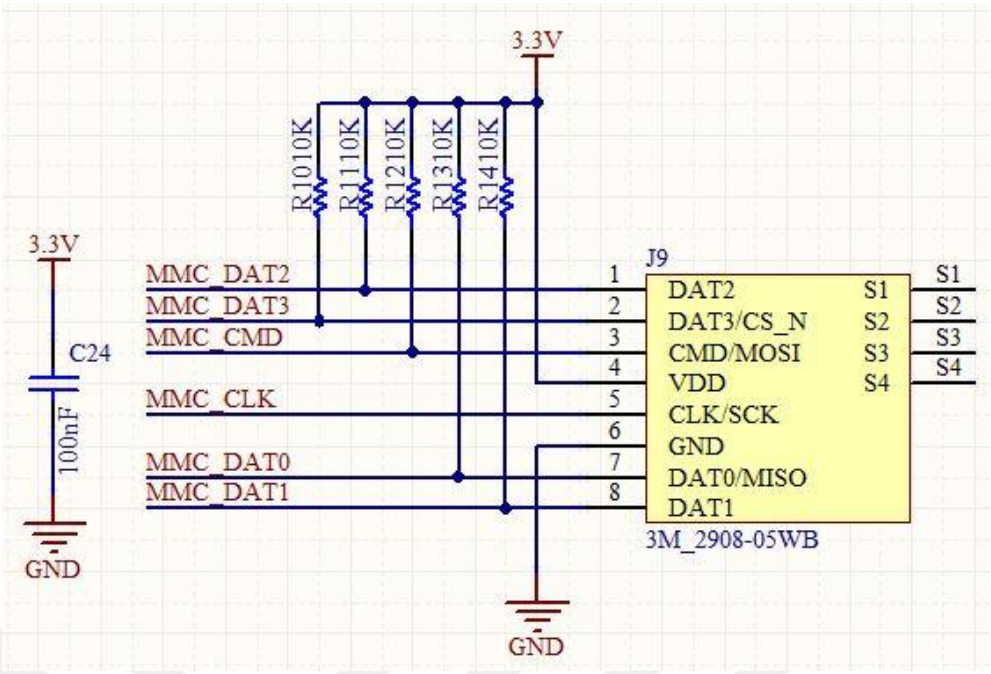


Figure 4.9 SD/MMC Card Interface of the Main Card

As shown at figure 4.9 IoT based BMS main card has a 4 bit SD/MMC card interface. Main controller can log data into SD/MMC card in a text file format. Thus, it increases battery management systems traceability in case there is no even internet connection by IoT platform.

4.1.5 Bluetooth Device

As we know Bluetooth is a key player for the internet of things applications. Therefore, IoT based BMS main card has Bluetooth ability that increases system functionality. Thanks to Bluetooth connection it is possible to monitoring battery management system values by smart phone or such devices.

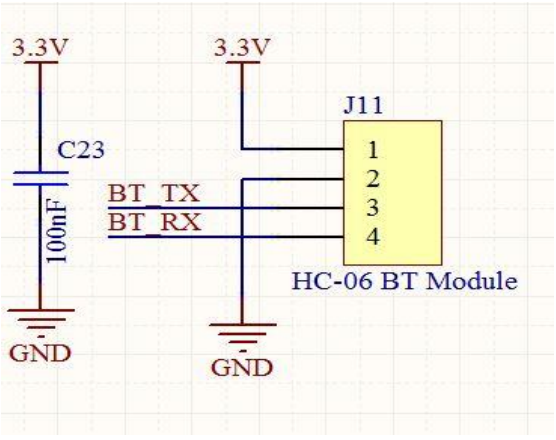


Figure 4.10 Bluetooth Interface of the Main Card

IoT based BMS main card uses Bluetooth module that can communicate with microcontroller via UART interface. In case there is no Wi-Fi connection it gives possibility to connects devices via Bluetooth such smart phones, tablets and so on.

4.1.6 Temperature Sensor Interface and Mosfet Switches

Sensing temperature is a most common measurement since temperature is an important key player for electronic devices or applications. As modular battery management systems can have temperature measurement module also IoT based BMS main card has temperature measurement interface to reduce system cost for cost sensitive battery management systems.

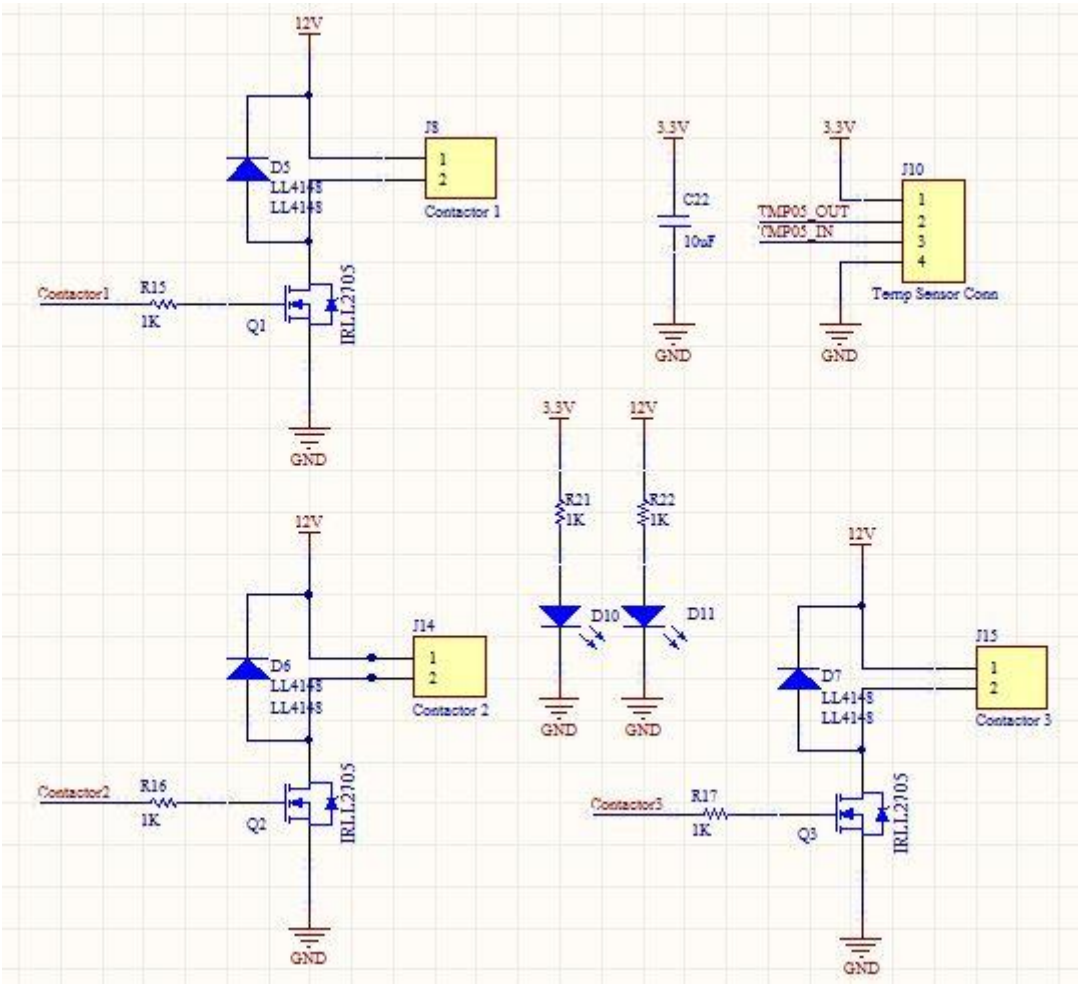


Figure 4.11 Temperature Sensor Interface and Mosfet Switches Schematic of the Main Card

As shown at figure 4.11 IoT based BMS main cad has a temperature sensor interface that can communicate certain type and number of temperature sensor IC's by using interface.

Figure 4.11 shows mosfet switches schematic diagram as well. IoT based BMS main card has three mosfet switches those well suited for battery management applications. These switches are directly controlled by the main controller. Mosfet switches could be used in purpose of such relay controls of the BMS, cell voltages or currents control instead of dedicated module to decrease system cost.

4.1.7 LEDs and Switches

In some cases, it might be need to give an input by the via buttons or indicate signal by using LEDs. Therefore, IoT based BMS main card have equipped with general purposes LEDs and switches.

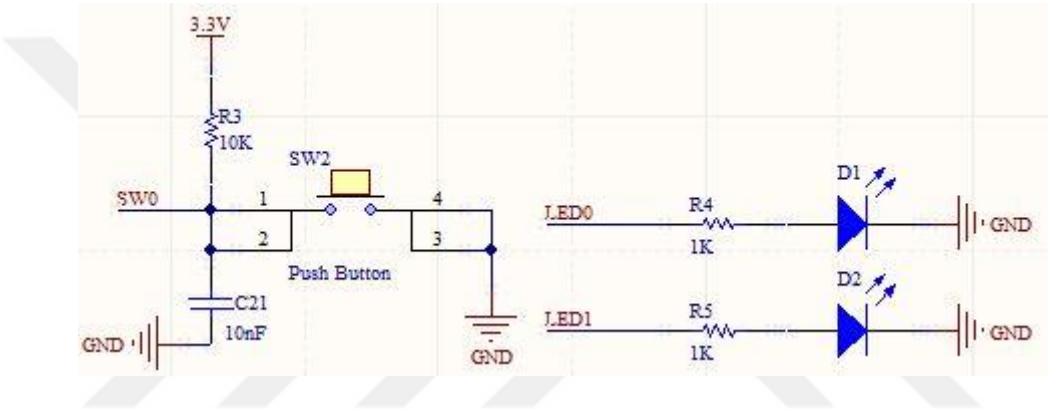


Figure 4.12 Push Button and LEDs Schematic Diagram of the Main Card

Figure 4.12 shows a schematic diagram of the push button and LEDs those are connected directly to the main controller. IoT based BMS main controller also include push button and LEDs those are connected to IoT platform. Thus, it is possible to give an input to main card or send a signal by LED indicators in case it is needed.

4.1.8 Power Domains

Mostly battery managements systems provide energy from the battery pack or charging voltage that means supply voltage could be varied in a range depending on the battery cell characteristics. To exceed this issue kind of voltage regulators, convertors etc. used on the battery management systems.

IoT based BMS main card uses two power domains to provide required voltages for the main card these are include efficient buck converters.

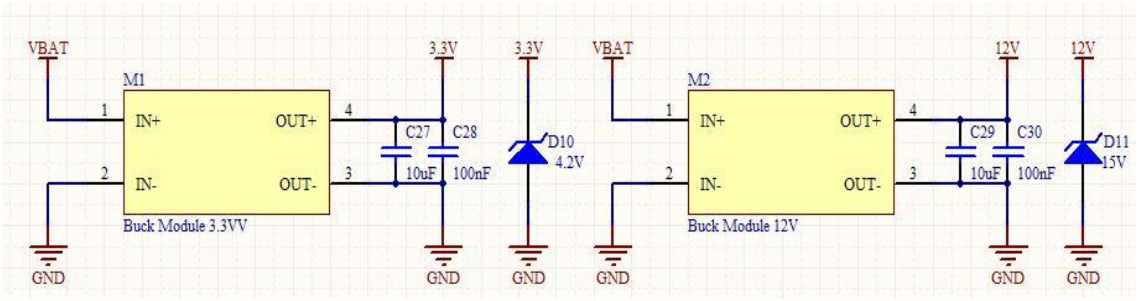


Figure 4.13 Power Domains Schematic Diagram of the Main Card

As we can see at figure 4.13 IoT based BMS main card has two power domains these are generate 12V and 3.3V supply voltages from the main battery voltage.

Power domains use LM2596S buck converter integrated circuit that is efficient buck converter switcher. Equation 4.2 shows an output formula for buck converter topology.

$$V_{out} = Duty\ Cycle\ x\ V_{in} (4.2)$$

Where Duty Cycle is a ratio between 0-1 that determined depending the output voltage. As you can understand output voltage of the buck converters cannot be higher than input voltage since its topology.

Battery voltage could change in some cases that affects buck converter input voltage as well. To provide fixed output voltage independent from the input voltage LM2596S arranges duty cycle ratio. Equation 4.3 shows an output voltage formula that depends to resistors value

$$V_{OUT} = V_{REF}\left(1 + \frac{R_{Adj}}{R_{Const}}\right) \quad (4.3)\ [30]$$

Where V_{REF} = 1.23V, R_{Const} is also has fixed value and R_{Adj} can be adjusted to achieve desired output voltage.

The IoT base battery management system main card has two buck converter modules those adjusted to achieve 3.3v and 12V voltage outputs. These modules also can provide high currents up to 3A that allows to supply other modules of the battery management system in case it is needed.

4.2 Circuit Schematic of the Main Card

The internet of things based battery management system main card have designed as an electronic circuit by using Altium Designer CAD software. Figure 4.14 and 4.15 show full detailed schematic of the main card.

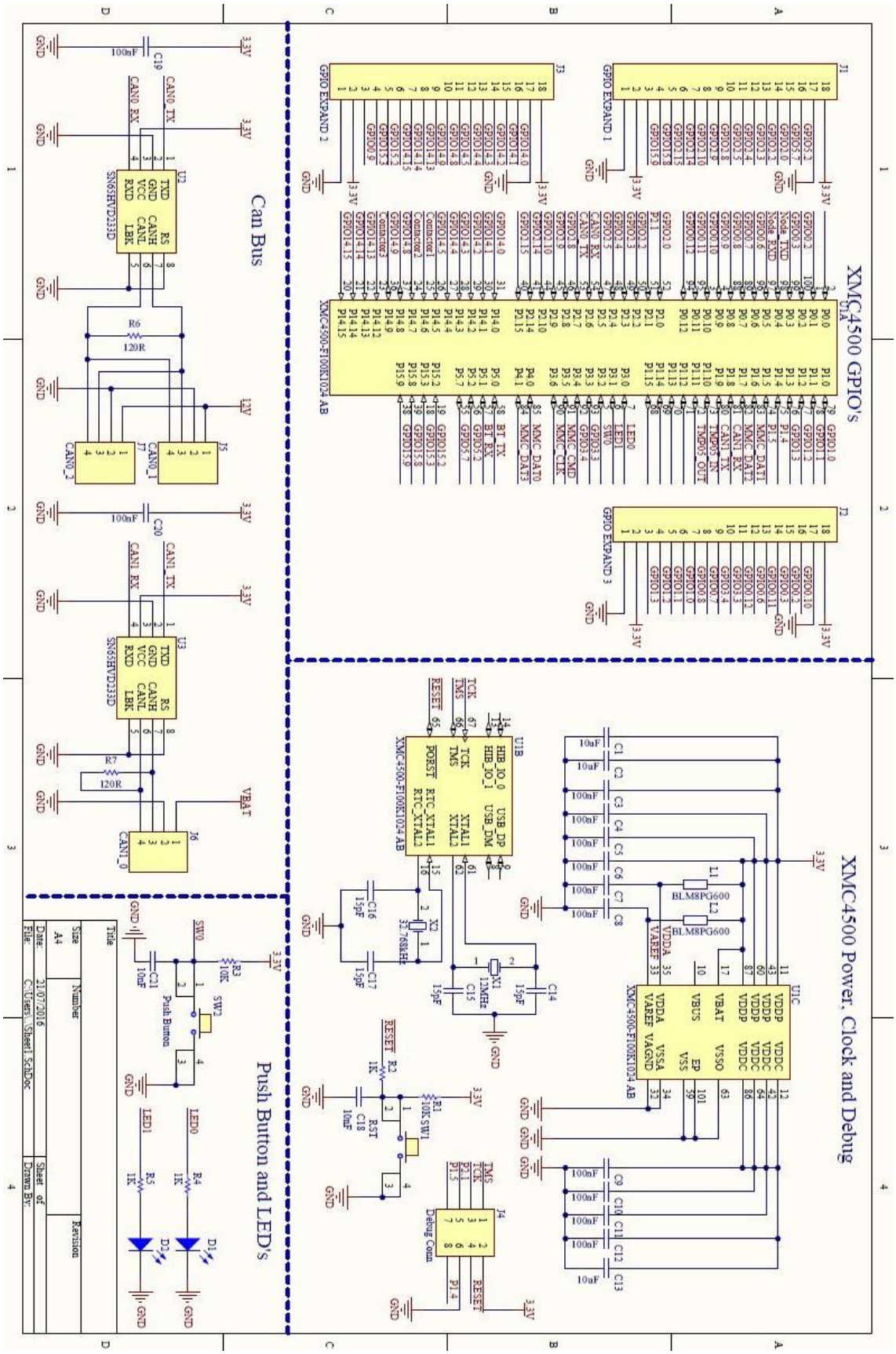


Figure 4.14 Electronic Circuit Schematic Sheet 1 of the Main Card

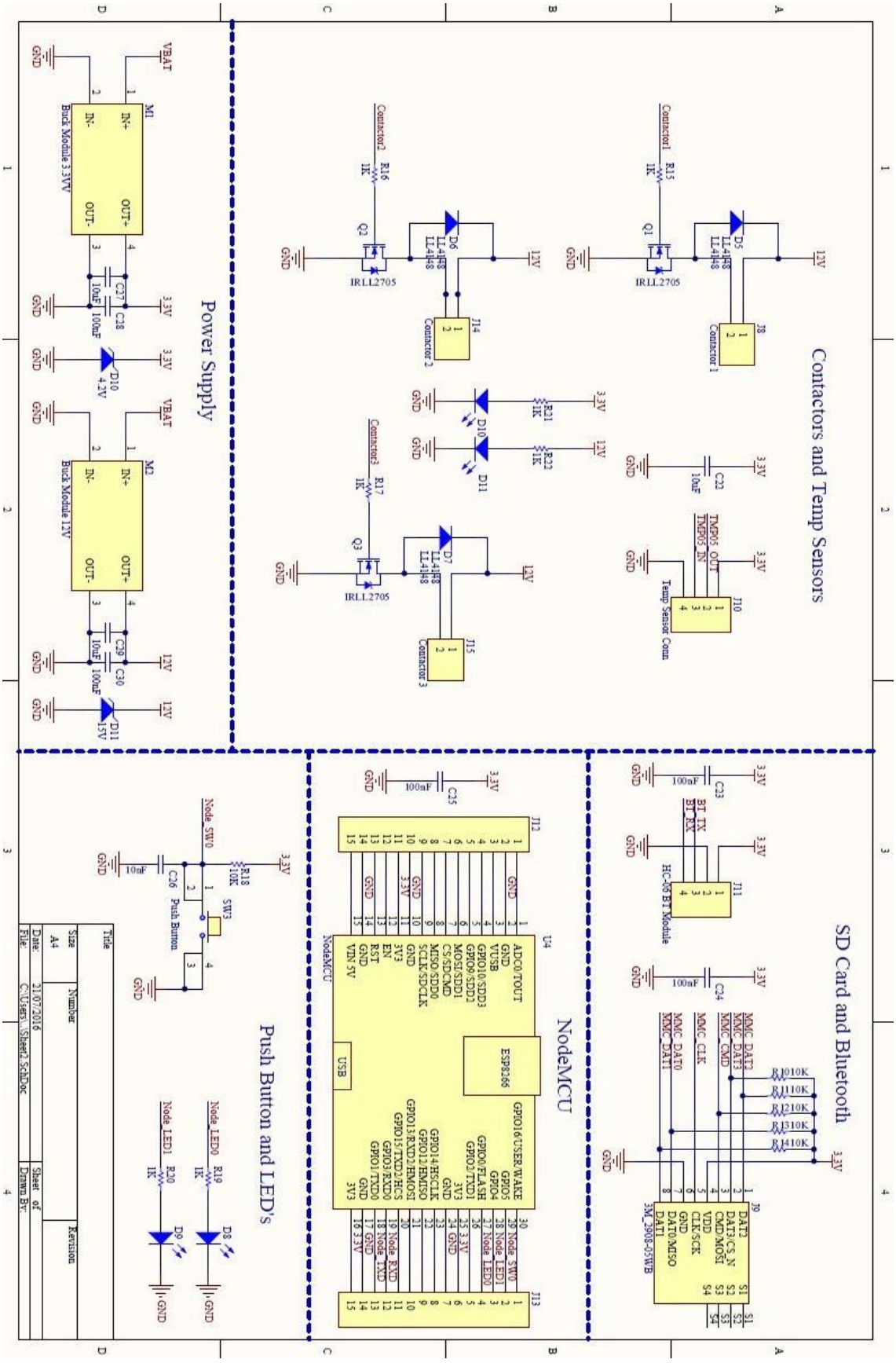


Figure 4.15 Electronic Circuit Schematic Sheet 2 of the Main Card

Figure 4.14 and 4.15 show full detailed electronic schematic diagram of the internet of things based battery management system main card. During design of the main card some key issues considered. These issues are functionality of the system, compatibility for future applications, cost of the system, choosing optimum components for the design and compatibility with the internet of things applications. In context of these issues schematic diagram of the main card have designed as much as optimum.

4.3 Printed Circuit Board Design of the Main Card

The internet of things based battery management system main card realized by designing printed circuit board with electronic components. It has 2 layers printed circuit board that has 177x127mm size. Printed circuit board have designed by using Altium Designer CAD program.

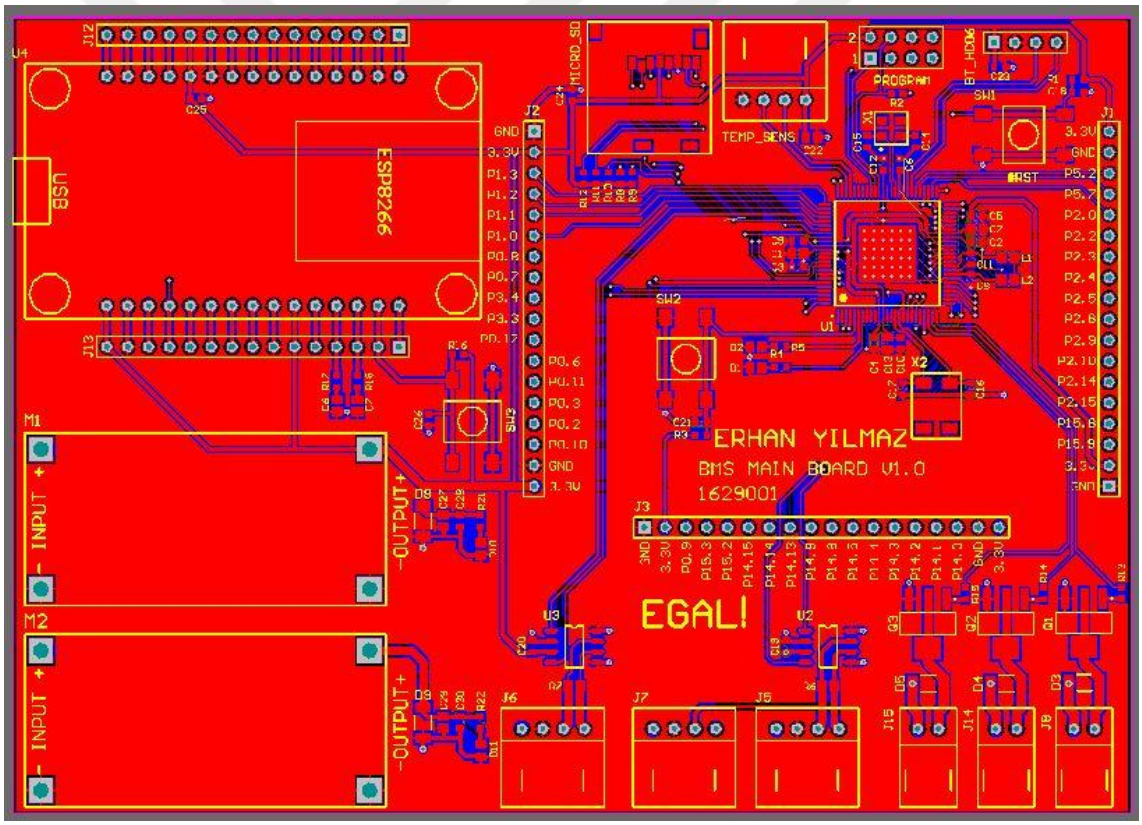


Figure 4.16 Printed Circuit Board Layouts of the Main Card

Figure 4.16 shows printed circuit board layouts of the main card. As you can see from the figure unused GPIO pins of the main controller have taken out by header to use for future applications when it needed.

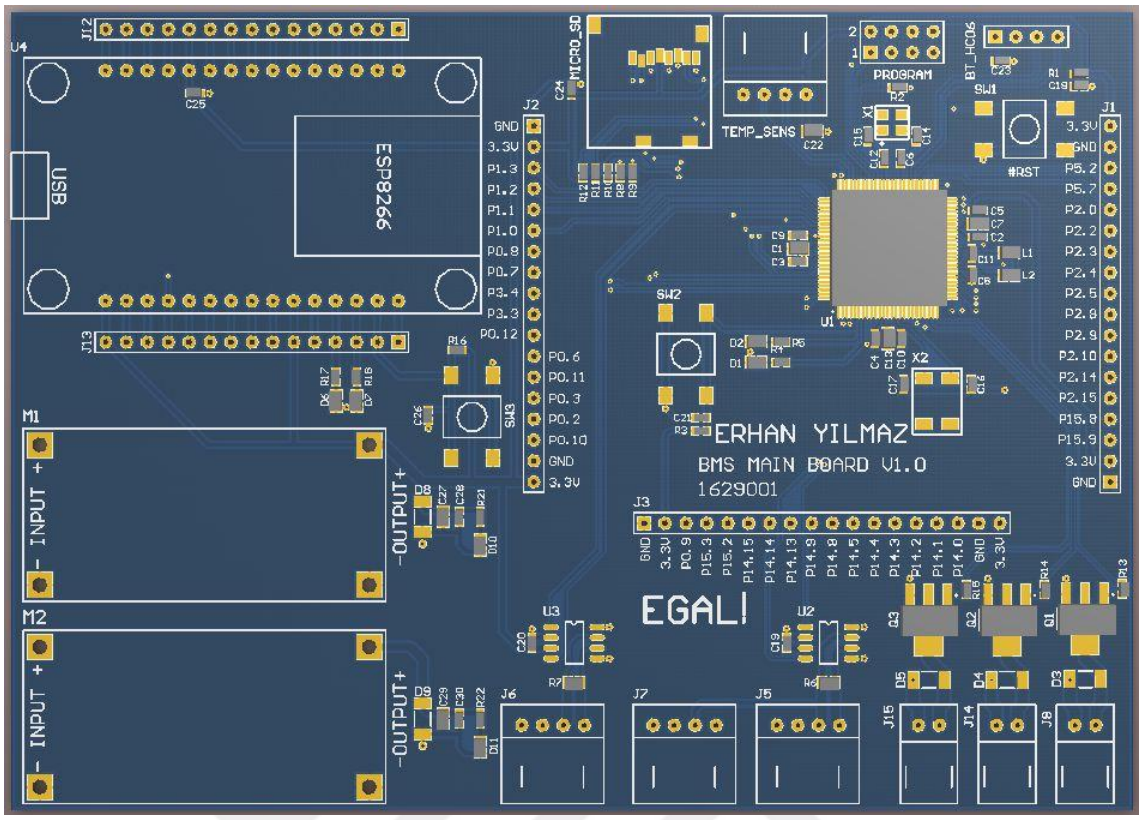


Figure 4.17 3D Rendering of the Main Card Printed Circuit Board

Figure 4.17 shows 3D rendering of the main card printed circuit board. It is rendered by using Altium Designer. 3D rendering gives an information before realize the main card.

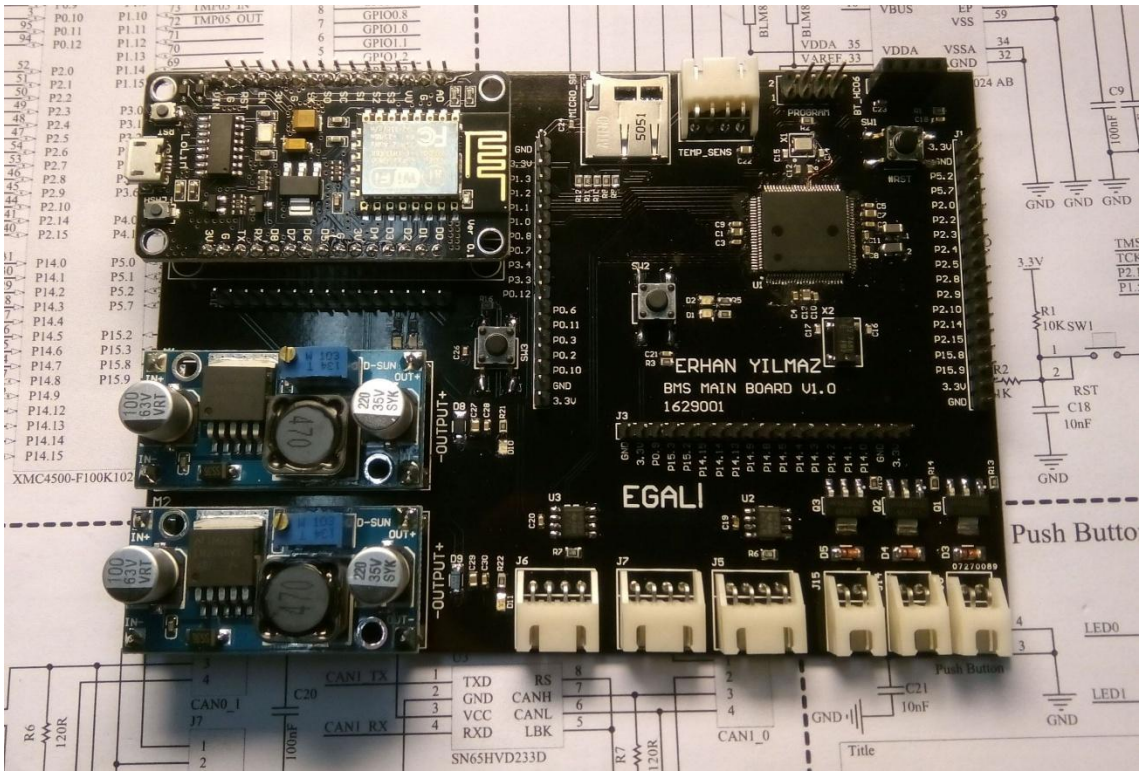


Figure 4.18 Internet of Things Based Battery Management System Main Card

Figure 4.18 shows completed figure of the internet of things based battery management system main card. As you can see from the figure all blocks of the main card located as regional as possible. For example; Buck modules are located to left-down corner of the board to keep other blocks as far as possible to prevent electromagnetic interference with other blocks as much as possible. IoT platform and its related components are located to the left-up corner of the board to make board design easier. Similarly, connectors are located to next each other and aligned to board border. That makes installation and connection easier with other modules of the battery management system.

Thus, design of the internet of things based battery management system main card is completed as hardware. Board cost is approximately 20$ US including all components. For high volume productions cost could be reduced. Basic setup installation for test, experiment results and test applications details are given for next chapter.

CHAPTER 5

RESULTS AND DISCUSSION

This chapter covers test results and discussions of the designed internet of things based battery management system main card. To test functionality and to see results required setup have installed in a laboratory.

5.1 Test Setup and Installation

Test process of the internet of things based battery management system main card have realized by using required test setup in a laboratory.

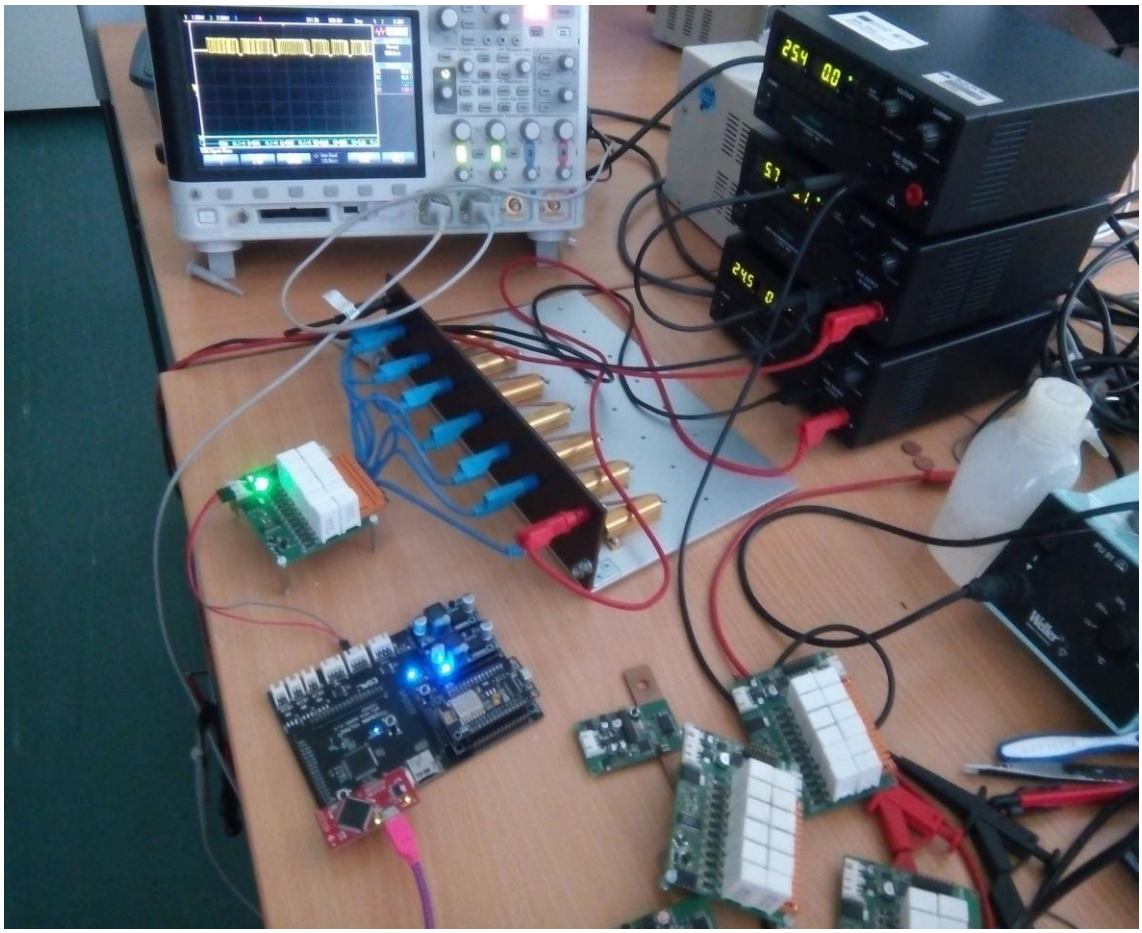


Figure 5.1 Test Setup of the Main Card

Figure 5.1 shows test setup for the internet of things based battery management system main card. Setup includes voltage measurement module for modular battery management systems. High power resistors are used as load to simulate battery cells.

Voltage measurement module communicates with the main card via Can bus line. Required test software have written to communicate with module and IoT bridge. Test setup also includes required power supplies and oscilloscope to see communication signals.

5.2 Communication with Computer

The internet of things based battery management system main card uses MQTT communication protocol to publish cell voltage measurements for test process. MQTT also requires broker software to manage all communications between publisher and subscribers. That broker software works on a Linux operating system based computer. Broker software also could run on a server that is not in the local network. There are kind of web services those give a service as broker.

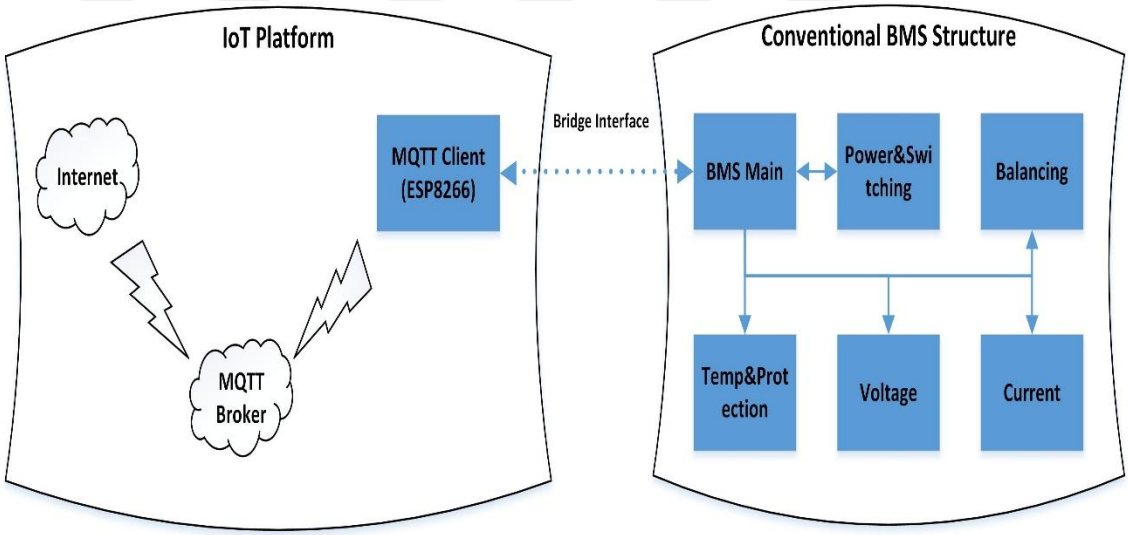


Figure 5.2 IoT Based Battery Management System Block Diagram

Figure 5.2 show a representation of the internet of things based battery management system block diagram. IoT platform gives Wi-Fi ability to battery management system. Thus, battery management system can connect to the internet using MQTT protocol. Connecting directly to the internet is also possible by using IoT platform. However, MQTT protocol have chosen to publish or get messages in safety and for easy management of the communication.

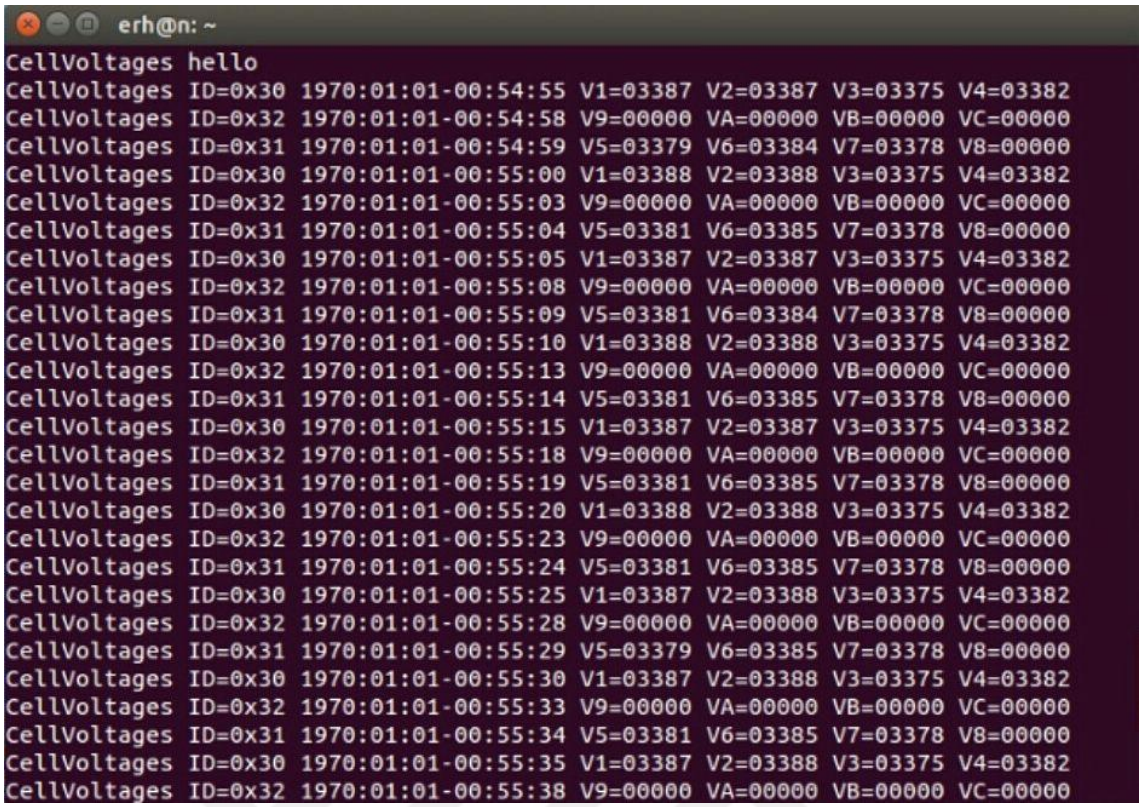


Figure 5.3 Receiving Cell Voltage Values as Subscriber from the BMS Main Card by Personal Computer

Figure 5.3 shows screenshot of a computer that runs Mosquitto [31] MQTT client software to get published messages from the internet of things based battery management system.

The internet of things based battery management system main card gets cell voltage values from the voltage measurement module via CAN bus. Afterward main card publishes these values by using MQTT over broker under specified topic name that is "CellVoltages". Messages also include packet ID and date, time information. Thus, cell voltage values could be tracked by clients that are subscribed to related topics.

5.3 Communication with Smart Phone

Since, MQTT is a popular and useful communication protocol, MQTT clients program are also exist for smart phones and such devices. Thus, it is possible to get published messages from the internet of things based battery management system without requiring any extra hardware or equipment.



Figure 5.4 Receiving Cell Voltage Values as Subscriber from the BMS Main Card by Smart Phone

Figure 5.4 shows screenshot of an Android operating system based smart phone that runs MQTT client software to get cell voltage values from the internet of things based battery management systems.

The internet of things based battery management system, MQTT broker and smart phone have connected to same Wi-Fi network. Thus, as you can see from the figure 5.4 smart phone can get published cell voltage values messages via MQTT broker since it is subscribed.

5.4 Storage Measurement Values

The internet of things based battery management systems main card has ability to storage data such systems values, measurement values into SD/MMC cards.

Main controller of the main card uses FAT file systems to manage data storage into SD/MMC card that is also supported by many operating systems. Equation 5.1 shows data storage format for voltage measurement logs in a text file.

$$ID =< ID_{No} >< Date > -< Time > V_n =< Value_n(mV) > V_{n+1} = < Value_{n+1}(mV) > V_{n+2} =< Value_{n+2}(mV) > V_{n+3=} < Value_{n+3}(mV) > (5.1)$$

Measurement logs are also terminated by using CR (Carriage Return) and NL (New Line) characters in the ASCII table.

```
ID=0x30 2016:07:01-13:06:39 V1=03505 V2=03505 V3=03492 V4=03501
ID=0x31 2016:07:01-13:06:39 V5=03498 V6=03502 V7=03496 V8=00000
ID=0x32 2016:07:01-13:06:39 V9=00000 VA=00000 VB=00000 VC=00000
ID=0x30 2016:07:01-13:06:39 V1=03505 V2=03505 V3=03493 V4=03501
ID=0x31 2016:07:01-13:06:39 V5=03498 V6=03502 V7=03496 V8=00000
ID=0x32 2016:07:01-13:06:39 V9=00000 VA=00000 VB=00000 VC=00000
ID=0x30 2016:07:01-13:06:40 V1=03505 V2=03505 V3=03493 V4=03501
ID=0x31 2016:07:01-13:06:40 V5=03498 V6=03502 V7=03496 V8=00000
ID=0x32 2016:07:01-13:06:40 V9=00000 VA=00000 VB=00000 VC=00000
ID=0x30 2016:07:01-13:06:40 V1=03505 V2=03505 V3=03493 V4=03501
ID=0x31 2016:07:01-13:06:40 V5=03498 V6=03504 V7=03496 V8=00000
ID=0x32 2016:07:01-13:06:40 V9=00000 VA=00000 VB=00000 VC=00000
ID=0x30 2016:07:01-13:06:41 V1=03505 V2=03505 V3=03493 V4=03501
ID=0x31 2016:07:01-13:06:41 V5=03498 V6=03502 V7=03496 V8=00000
ID=0x32 2016:07:01-13:06:41 V9=00000 VA=00000 VB=00000 VC=00000
ID=0x30 2016:07:01-13:06:41 V1=03505 V2=03505 V3=03493 V4=03501
ID=0x31 2016:07:01-13:06:41 V5=03498 V6=03504 V7=03496 V8=00000
ID=0x32 2016:07:01-13:06:41 V9=00000 VA=00000 VB=00000 VC=00000
ID=0x30 2016:07:01-13:06:42 V1=03505 V2=03505 V3=03493 V4=03501
ID=0x31 2016:07:01-13:06:42 V5=03498 V6=03504 V7=03496 V8=00000
```

Figure 5.5 An Example Data Logs of the Main Card

Figure 5.5 shows an example data logs of the main card. Data logs could be useful to analyze battery management system status. In case there is no internet connection data logs could be transferred to PC by using SD/MMC card reader to see systems values.

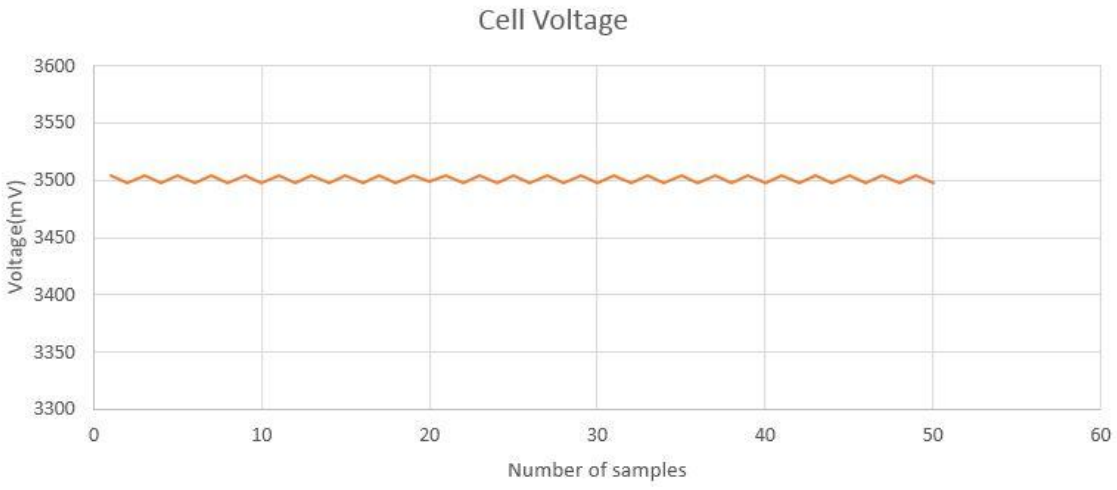


Figure 5.6 Graphic of the Logged Cell Voltage Values

Figure 5.6 shows graphic of the logged cell voltage values from the main card. Since, logged values have a straight format that is easy to process values by using various documentation software's.

5.5 Conclusion

By designing a novel internet of things based battery management system main card as we have seen from results it is possible to use internet of things applications with battery management systems.

Internet of things gives an insight to create innovative, functional and sophisticated applications for future studies. Increasing demand on the internet of things applications also provides more cost effective and featured solutions by the manufacturers. Thus, it will make possible to see more internet of things applications by the future.

Battery management systems are also shaping themselves for the future applications to improve their functionality, efficiency, reliability and so on. Doubtless combining internet of things applications with battery management systems would help to improve battery management systems applications.

Nowadays wireless communication is one of the most popular communications technics. In that context to give a wireless communication ability to battery management systems would be beneficial as well. Since, mobile and electricity vehicles getting more popular, battery management systems would have more applications as well.

REFERENCES

[1] Buccolini L., Ricci A., Scavongelli C., DeMaso-Gentile G., Orcioni S., Conti M., "Battery Management System(BMS) Simulation Environment for Electric Vehicles", 2016 IEEE 16th International Conference on Environment and Electrical Engineering (EEEIC), 1-6, DOI:10.1109/EEEIC.2016.7555475, 2016.

[2] Aldogan E, "Elektrikli Araçlar için Batarya Yönetim Sistemi Donanım Tasarımı", Gebze Yüksek Teknoloji Enstitüsü/Mühendislik ve Fen Bilimleri Enstitüsü,Elektronik Mühendisliği Anabilim Dalı, Gebze, 2012.

[3] Lucas V., Hartmann, Euler C., Macedo T., Yuri P. M., Rodrigues, Juan M. Villanueva, Vidal C., "Network-capable Smart Batteries for Smart Grid and Battery Management Systems", 2016 IEEE International Instrumentation and Measurement Technology Conference Proceedings,1 - 6, DOI: 10.1109/I2MTC.2016.7520436, 2016

[4] FTC Staff Report, https://www.ftc.gov/system/files/documents/reports/federal-trade-commission-staff-report-november-2013-workshop-entitled-internet-things-privacy/150127iotrpt.pdf, January 2015

[5] Garcia M. JA., Pinedo-Farusto E., "An Experimental Analysis of Zigbee Networks", IEEE, 33rd IEEE Conference ,(2008) 723- 729.

[6] Liu Y., Zhou G., "Key Technologies and Applications of Internet of Things", IEEE, Fifth International Conference on Intelligent Computation Technology and Automation, (2012) 197-200.

[7] Gerd K., Fahim K., Daniel F., Vasughi S., (2010), "Smart Objects and Building Blocks of Internet of Things", IEEE Internet Computing Journal, Vol. 14, 1: 44-51.

[8] Yiğitbaşı Z., "Nesnelerin İnterneti ve Makineden Makineye Kavramları İçin Kilit Öncül", Ulusal IPv6 Konferansı , (2011) 103-108.

[9] Bozdoğan Z., "Nesnelerin İnterneti için Mimari Tassarımı", Düzce Üniversitesi Fen Bilimleri Enstitüsü Bilgisayar Mühendisliği Anabilim Dalı, Düzce, 2015

[10] Internet of Things, https://commons.wikimedia.org/wiki/File:Internet_of_Things.jpg, 01 January 2017

[11] Wi-Fi, https://tr.wikipedia.org/wiki/Wi-Fi, 01 January 2017

[12] Ralph Santitoro, https://www.mef.net/Assets/White_Papers/Metro-Ethernet-Services.pdf, 01 January2003

[13] IPv6, https://tr.wikipedia.org/wiki/IPv6, 01 May 2017

[14] 6LowPAN represent figure, http://www.ti.com/lsds/ti/wireless-connectivity/6lowpan/overview.page, 01 May 2017.

[15] Buyya R., Gubbia J., Marusic S., Palaniswami M., "Internet of Things (IoT): A Vision, Architectural Elements, and Future Directions", Elseiver, Future Generation Computer Systems 29 (2013) 1645-1660.

[16] IoT Analytcis, https://iot-analytics.com/10-internet-of-things-applications, 01 May 2017

[17] Amazon Automated Warehouse, http://www.techrepublic.com/article/amazon-robots-and-the-near-future-rise-of-the-automated-warehouse, 01 May 2017

[18] Safiye U., "Nesnelerin İnterneti Ekosisteminde Makineler Arası Özerk İletişim", Gazi Üniversitesi Bilişim Enstitüsü, Ankara, 2015.

[19] Machine to machine examples, http://iotworm.com/machine-machine-communication-examples-applications, 01 May 2017

[20] History of The Battery, https://en.wikipedia.org/wiki/Battery_ management_ system, 01 May 2017

[21] Tolga B., "Lityum Polimer Bataryalar için Batarya Yönetim Sistemi Geliştirilmesi", İstanbul Üniversitesi, Fen Bilimleri Enstitüsü, Elektrik Elektronik Mühendisliği Anabilim Dalı, İstanbul, 2013

[22] Altun Ş., "Elektrikli Araçlar için Batarya Yönetim Sistemi Algoritması Tasarımı ve Uygulaması", Gebze Yüksek Teknoloji Enstitüsü/Mühendislik ve Fen Bilimleri Enstitüsü, Elektronik Mühendisliği Anabilim Dalı, Gebze, 2012.

[23] James Moran, PowerPump™ Balancing, http://www.ti.com/lit/an/slua524b/slua524b.pdf, 01 January 2009

[24] An Example Centralized Battery Management System, http://www.ocean-server.com/bmm_bb04.html, 01 May 2017

[25] An Example Distributed Battery Management System, https://endless-sphere.com, 01 May 2017

[26] Infineon-XMC4500-DS-v01_04-EN.pdf, http://www.infineon.com/dgdl/Infineon-XMC4500-DS-v01_04-EN.pdf, 01 May 2017

[27] ESP8266, https://en.wikipedia.org/wiki/ESP8266, 01 May2017

[28] xmc4500_rm_v1.5_2014_07.pdf, http://www.infineon.com/dgdl/xmc4500_rm_v1.5_2014_07.pdf, 01 May 2017

[29] MQTT, http://mqtt.org, 01 May 2017

[30] LM2596 Datasheet, http://www.ti.com/lit/ds/symlink/lm2596.pdf, 01 May 2017

[31] Mosquitto, https://mosquitto.org/, 01 May 2017

CURRICULUM VITAE

PERSONAL INFORMATION

Name Surname : Erhan YILMAZ

Date of birth and place : 20.02.1990/Üsküdar

Foreign Languages : English(Advanced), German(Basic)

E-mail : erhanyilmaz.ytu@gmail.com

EDUCATION

Degree	**Department**	**University**	**Date of Graduation**
Master	Elek. ve Hab. Müh.	YTÜ	
Undergraduate	Elek. ve Hab. Müh.	YTÜ	2013
High School	Elektronik	Kartal End. Mes. Lisesi	2007

WORK EXPERIENCE

Year	**Corporation/Institute**	**Enrollment**
2017-	VLE Electronics	R&D Engineer
20015-2016	İSBAK A.Ş.	R&D Engineer
2014-2015	EDS Elektronik	R&D Engineer

AWARDS

1. Angelhack İstanbul 2015 – Hackathon **1st winner team**
2. Media Hack Day – Hackathon (2015, Berlin) **1st winner team**
3. Ecomhack Berlin 2015 **1st winner team**