TWO PHASE FLOW SEPARATION IN A HORIZONTAL SEPARATOR BY INLET DIVERTER PLATE IN OILFIELD INDUSTRIES

[1]SEDAT YAYLA, [2]KARWAN KAMAL, [3]SEYFETTIN BAYRAKTAR, [4]MEHMET ORUC

[1, 2, 4] Department of Mechanical Engineering, Yuzuncu Yil University, Van, Turkey,
[3]Department of Naval Architecture & Marine Engineering, Yildiz Technical University, Istanbul, Turkey
E-mail: [1]sedyayla@yahoo.com, [2]karo.engineer@gmail.com, [3]giym2001@gmail.com, [4]mehmetoruc@yyu.edu.tr

Abstract - In the present study, series of simulations were carried out for two phase (oil and gas) and three-dimensional turbulent flow through a horizontal oil-separator. The paper mainly focused on the dependence of the separation efficiency of the oil-separator to the distance between the diverter plate and the inlet pipe for various inlet velocities. Three different distances (100 mm, 150 mm and 200 mm) were considered for four different inlet velocities; 0.25 m/s, 0.50 m/s, 0.75 m/s and 1.00 m/s. Computational fluid dynamics (CFD) studies revealed that the lowest separation efficiency was 56% when the space between the diverter of top inlet was 100 mm and the velocity was 1 m/s. Nevertheless, the highest separation efficiency was found when the fluid flows with 0.25 m/s through the vertical pipe whose inlet was 200 mm away from the diverter plate. For this case, the flow separation was calculated as 99%. It was concluded that there are an inverse correlation between the inlet velocity and the separation efficiency.

Keywords - Horizontal separator, Oil gas separation, Two phase flow.

I. INTRODUCTION

Gas and oil are acquired from petroleum wells as a compound of various composites such as gas, water, oil, and solid constituents. Therefore, the process of oil and gas separation is applied to this compound as an initial work. In natural gas and petroleum production fields, gravity separators have common application to separate gas, oil and liquid. Relying on the particular requirements of the well field, they are designed in vertical, horizontal and spherical configurations. In comparison to vertical gravity separators, the horizontal one has cheap production expenses. In addition, so as to improve the separation, the horizontal separators have wide interphase zone. In carrying out every horizontal separator, there are three separation zones. Firstly, the major quantity of liquid and gas is removed via inlet diverter in the primary separation where the rapid alterations in the direction of flow occur and the fluid velocity declines. Furthermore, the direction of stream is altered and greatest amount of the fluid is diverted downward in the separator. Secondly, owing to the force of gravity, when the oil droplets bigger than 140 µm, it settles out of the gas stream. Finally, oil droplets smaller than 140 µm are removed in the mist elimination, [1, 2]. Fig.1 indicates a horizontal separator with a vertical inlet pipe and two outlet pipes for gas and liquid phases. Presently, for correct designing or improving the efficiency of equipment a technique called computational fluid dynamic (CFD) is utilized. So far, few studies have been conducted for improving two phase separators efficiency in manufacturing scale [3]. A baffle plate for enhancing the efficiency of horizontal primary separators was investigated by Ref. [4]. For such flows computational fluid dynamics (CFD) techniques have been used as done for simulating pilot-plant-scale two phase separator [5]. It was stated that, precise two phase liquid behavior simulation via CFD is a complicated work and requires comprehend specifications of the flow. The Euler-Lagrange method and the Euler-Euler method are two main approaches for the simulation of two phase flows. There are three diverse Euler -Euler models such as the Eulerian model, the mixture model and the volume of fluid (VOF).

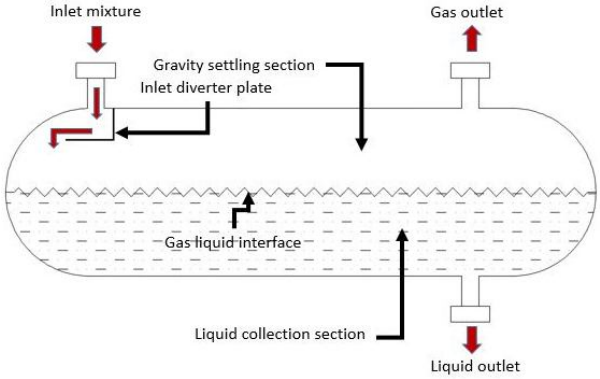

Figure 1: A horizontal type separator.

The present paper exhibits a series of simulations for a horizontal separator by employing Euler-model. By this method, the two phase flow behavior through a horizontal separator can be demonstrated and the separation efficiencies are found for various inlet velocities and the distances between the inlet and the diverter plate.

II. METHODOLOGY AND MATHEMATICAL MODEL

The present numerical study demonstrates the results of three dimensional (3D) two phase gas-oil horizontal separator under steady-state conditions. The separator under consideration has a length of 3 m and a height of 0.9 m while both inlet and outlet pipes are 1 m long.

The inlet diverter plate has a length of 0.3 m and width of 0.270 m. Three vertical distances (100 mm, 150 mm, and 200 mm) were investigated to reveal its effect on the separator efficiency (Fig.2).

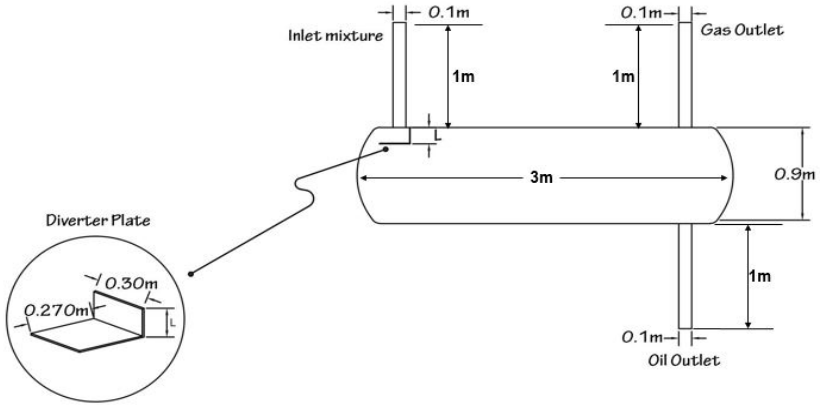

Figure 2: Geometry and dimensions of the separator.

Working domain consists of an inlet and two outlet pipes and horizontal separator. Before proceeding into a detailed analysis the working domain was discretized into several small volumes called cells. Initially, a mesh independence study was performed to be sure that the solutions are independent of the mesh number. As presented in Table.1, several mesh structure called coarser, coarse, normal, fine and finer were generated. It is seen that increasing the number of mesh elements decreases the difference between the calculated separation efficiency and the ideal efficiency (100%). The minimum difference was obtained with the finer mesh that contains 684902 elements, therefore, all the simulations were performed with the finer mesh in Figure.3.

Mesh Structure	Number of element	Separation efficiency	Difference (%)
Coarser	201248	95.1	4.9
Coarse	310233	96.4	3.6
Normal	423396	97.8	2.2
Fine	526778	98.6	1.4
Finer	684902	99.772	0.2

Table 1. Mesh independence study

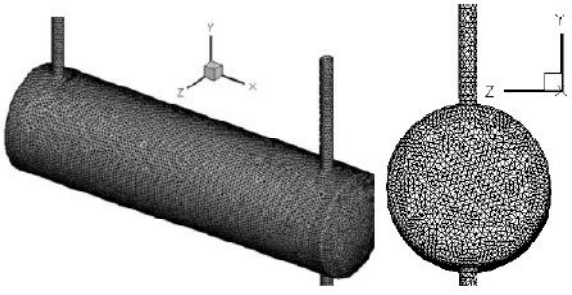

Figure 3: Mesh elements used on the separator.

As shown in Figure.3 relatively denser mesh elements were used towards the outer walls of the pipes and separator and also at the intersection of the lateral areas of the separator with the two ends of it. This approach ensures taking into account the large gradients at the vicinity of the walls and the regions where the flow changes its direction. Boundary conditions applied to the domain is shown in Fig.4. The inlet of the mixture to the pipe seen at the top-left side was specified as velocity inlet while the outlet of the pipes seen at top-right and bottom-right were set as outflow. The pipe lateral walls, the diverted plates as well as the separator walls were defined as wall type.

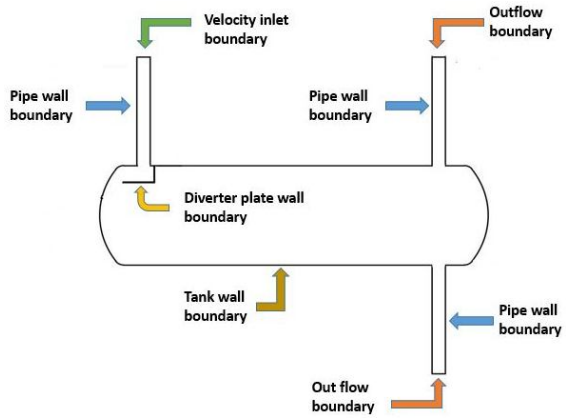

Figure 4: Boundary conditions applied to the separator

Figure 4: Boundary conditions applied to the separator Densities of crude oil and natural gas are taken as 825 kg/m^3 and 60.8 kg/m^3, respectively while the dynamic viscosities of them are set as 0.00237 kg/(m.s) and 1.2×10^{-5} kg/(m.s), respectively.

Related equations are presented below where Eq.1 and Eq.2 shows continuity and momentum equations, respectively, [6, 7, 8].

$$\frac{\partial \rho}{\partial x}(\rho u) + \frac{\partial \rho}{\partial y}(\rho v) + \frac{\partial \rho}{\partial z}(\rho w) = 0 \qquad (1)$$

$$\nabla \cdot (\rho \vec{v}\vec{v}) = -\nabla p + \nabla \cdot (\bar{\tau}) + \rho \vec{g} + \vec{F} \qquad (2)$$

where p is the static pressure, $\bar{\tau}$ is the stress tensor and $\rho\vec{g}$ and $\vec{F}$ are the gravitational body force and external body force.

For two phase flow simulations the Eulerian method was adopted. It was reported that standard k-ε turbulence model is robust, economic and accurate for wide range of turbulent flows in industrial applications

[6], therefore, standard k-ε turbulence model was chosen as turbulence model. Eq. 3 and Eq.4 represents the turbulence kinetic energy (k) and its dissipation rate (ε), respectively, [6].

$$\frac{Dk}{Dt} - \frac{\partial}{\partial x_j}\left[\left(\frac{v_t}{\sigma_k}\frac{\partial k}{\partial x_j}\right)\frac{\partial k}{\partial x_j}\right] + v_t\frac{\partial u_j}{\partial x_j}\left[\frac{\partial u_i}{\partial x_j} + \frac{\partial u_j}{\partial x_i}\right] - \varepsilon \qquad (3)$$

$$\frac{D\varepsilon}{Dt} = \frac{\partial}{\partial x_j}\left[\frac{v_t}{\sigma_\varepsilon}\frac{\partial k}{\partial x_j}\right] + C_1 v_t\frac{\varepsilon}{k}\frac{\partial u_j}{\partial x_j}\left[\frac{\partial u_i}{\partial x_j} + \frac{\partial u_j}{\partial x_i}\right] - C_2\frac{\varepsilon^2}{k} \qquad (4)$$

Magnitude of the coefficients seen in the equations are given as follows:

$$C_\mu = 0.09 \qquad C_1 = 1.44 \qquad C_2 = 1.92$$

$$\sigma_k = 1.0 \qquad \sigma_\varepsilon = 1.3$$

After the simulations the separation efficiency (Ƞ) calculated as given in Eq.5 [7, 9]

$$\eta = 100 * \frac{\dot{m}_{oil\ inlet} - \dot{m}_{oil\ content\ in\ gas\ outlet}}{\dot{m}_{oil\ inlet}} \qquad (5)$$

III. RESULTS AND DISCUSSION

Before proceeding into the analyses a comparison were made for the validation of the present study. For this purpose, results of the present CFD study was compared with the data of Efendioglu et al., 2014. The difference between two studies were found as 0.5% and 0.1% for the distances between the inlet and diverter plate of L=100 mm and L=170 mm, respectively (Fig.5).

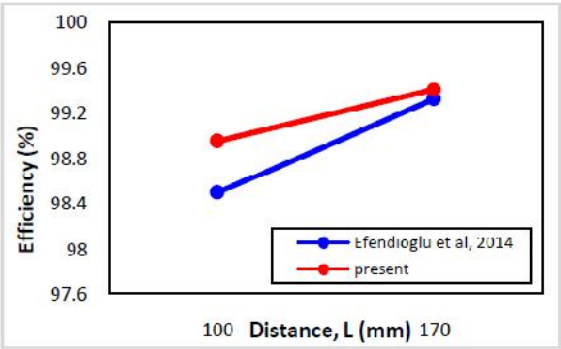

Figure 5: Comparison of the present study with the data of Efendioglu et al., 2014.

Oil separators have been used to separate the gas and oil by means of inlet diverter(s) that isolates the oil and gas quickly by altering the direction and velocity. After that, in gas and liquid interface the liquid droplets are impacted by gravitational force in the gravity settling part. For various inlet velocities the liquid entrainment in the gas outlet was measured. Figure.6 demonstrates the volume fraction of oil and gas phases when the diverter plate was L=200 mm away from the inlet and the mixture enters the separator with 1 m/sec. It is seen that the mixture issuing from the top inlet with a high velocity impinges on the diverter plate by the gravitational effects. After the impingement the velocity decreases and flow changes its direction and most of the fluid is diverted downward in the separator. Furthermore, the momentum of the droplet is exchanged to some extent. Thus, because of the impact of gravity the droplets are settled down before the gas flows toward the exit with a lower velocity. This low velocity is required to give enough retention time for the oil droplets and allow the settlement of the oil film as shown in Figure.7

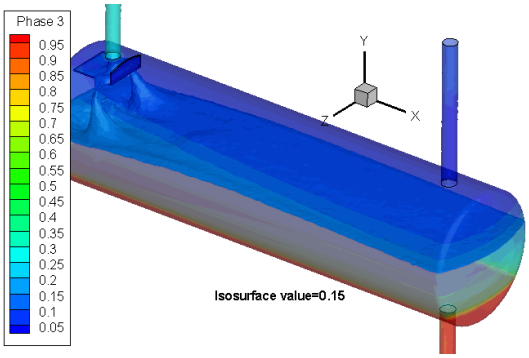

Figure 6: Volume fraction of oil (red) and gas (blue) for L=200 mm, V=1 m/s

As shown in Fig,7 initially, as the mixture entered the separator the velocity increases a bit and the oil droplets move downward to the separator, gas attempting to move up to the top of it. Moreover, by the increase of the velocity of mixture inlet, the stream lines will clearly show more swirl stream. The occurrence of the swirl stream will impact the separation efficiency as oil droplets will exit with the gas from the gas outlet. When upsurge the vortex flow in separator the efficiency of separation of mixture is decreased.

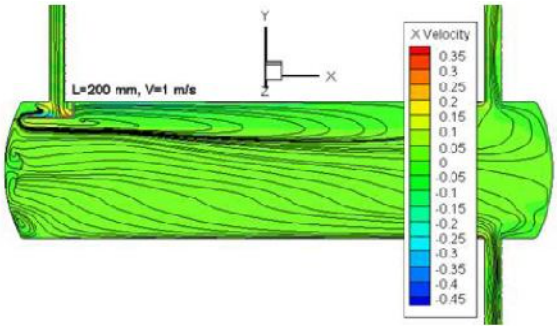

Figure 7: Streamlines through the separator for L = 200 mm, velocity 1 m/sec.

200 mm space between inlet and diverter plate			
Efficiency %	Velocity (m/s)	$\dot{m}_{oil\ inlet}$ kg/s	$\dot{m}_{oil\ content\ in\ gas\ outlet}$ kg/s
99.772	0.25	0.439	0.001
93.076	0.50	0.8781	0.0608
79.411	0.75	1.3172	0.2712
64.332	1.00	1.7562	0.6264

Table 2. Separation efficiency for L=200 mm.

Change of efficiency with the inlet velocity is given in Table 2 for L=200 mm. It is calculated that the separation efficiency decreases from 99.606 % to

56.416% when velocity increases from 0.25 m/s to 1.00 m/s, respectively.

CONCLUSION

The present paper reveals the effects of the mixture inlet velocity and the distance between the inlet and the diverter plate in a horizontal oil-gas separator used in oil industry. For this purpose, various plate distances and velocities were considered by means of CFD technique. The validation of the numerical results were successfully achieved by comparing them with the available data obtained in the open literature. Simulations reveal that there are an inverse correlation between the inlet velocity and the separation efficiency and direct proportion between the distance and efficiency.

REFERENCES

[1] Pourahmadi Laleh, A., Svrcek, W. Y., & Monnery, W. D. (2012). Design Criteria for Oilfield Separators Improved by Computational Fluid Dynamics. Chemical Engineering & Technology, 35(2), 323-333. J. U. Duncombe, "Infrared navigation—Part I: An assessment of feasibility," IEEE Trans. Electron Devices, vol. ED-11, pp. 34-39, Jan. 1959.

[2] Arnold, K., & Stewart, M. (1999). Surface Production Operations, Volume 2:: Design of Gas-Handling Systems and Facilities (Vol. 2). Gulf Professional Publishing.

[3] Ghaleni, M. M., & MortazaZivdar, M. Hydrodynamic Analysis of Two Phase Separator by Computational Fluid Dynamic (CFD).

[4] Wilkinson, D., Waldie, B., Nor, M. M., & Lee, H. Y. (2000). Baffle plate configurations to enhance separation in horizontal primary separators. Chemical Engineering Journal, 77(3), 221-226.

[5] Pourahmadi Laleh, A., Svrcek, W. Y., & Monnery, W. D. (2011). Computational Fluid Dynamics Simulation of Pilot-Plant-Scale Two-Phase Separators. Chemical engineering & technology, 34(2), 296-306.

[6] Fluent, A. (2011). 12.0, 2009,". Theory Guide, 16(4).

[7] Efendioglu, A., Mendez, J., & Turkoglu, H. (2014). The numerical analysis of the flow and separation efficiency of a two-phase horizontal oil-gas separator with an inlet diverter and perforated plates. Advances in Fluid Mechanics, 10, 133.

[8] Zhao, J., Jin, B., & Zhong, Z. (2007). Study of the separation efficiency of a demister vane with response surface methodology. Journal of hazardous materials, 147(1), 363-369.

[9] Arntzen, R. (2001). Gravity separator revamping, Dr. ing (Doctoral dissertation, thesis 2001: 16. Trondheim: Norwegian University of Science and Technology).

★★★